Michigan Scientific Corporation®

Agriculture Industry

Applications

Copyright © 2023 Michigan Scientific Corporation

Details provided in this document are purely for informational purposes and are subject to alterations.

Michigan Scientific Corporation
8500 Ance Road
Charlevoix, MI 49720
(1-231-547-5511)
michsci.com

Revision A1: April 11, 2023 12:00 p.m. twnachazel

Contents

Powertrain 4

- Crankshaft 5
- Rotating Shaft 6
- Wheel 7
- Combustion Chamber 8
- Steering Wheel 9
- Flywheel/Flexplate 10

Implements 11

- Drawbar 12
- Power Take-Off 13

Harvesting Equipment 14

- Feeder Slat 15
- Pulley/Gear 16
- Gearbox 17
- Rotor Blade 18

Powertrain

The powertrain of a vehicle consumes a significant portion of the total power from the engine. Testing components of the powertrain system can lead to producing a vehicle with greater fuel efficiency, power, speed, and durability. Michigan Scientific produces precision testing instruments designed to measure powertrain performance which can help determine where improvement is possible. Recommended products are outlined in this chapter, and customization is available to fit any powertrain component.

SW-SR2 Steering Wheel Transducer

CompRatio-D4(E)

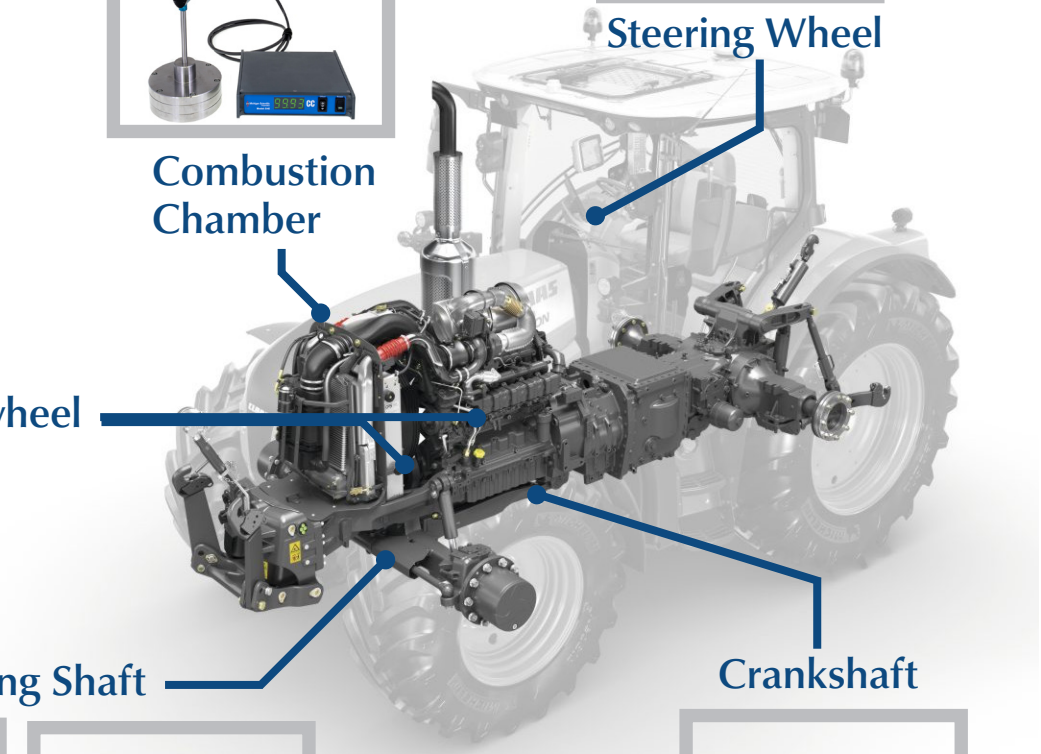

Flexplate Telemetry Torque Measurement System

Slip Ring Assembly

Split Collar Telemetry

ERT Slip Ring Assembly

Crankshaft

In the crankshaft, it is common to measure angle, position, velocity, and torque from the crank near the main journal bearing. Making bending measurements in the crankshaft, or measuring strain in highly stressed locations, such as the fillets of the throws (pins) can also be important. Typically, it is desirable to measure the output torque from the crank near the main journal bearing at the flywheel end of the crankshaft. This usually is the main measurement to which all other measurements are correlated.

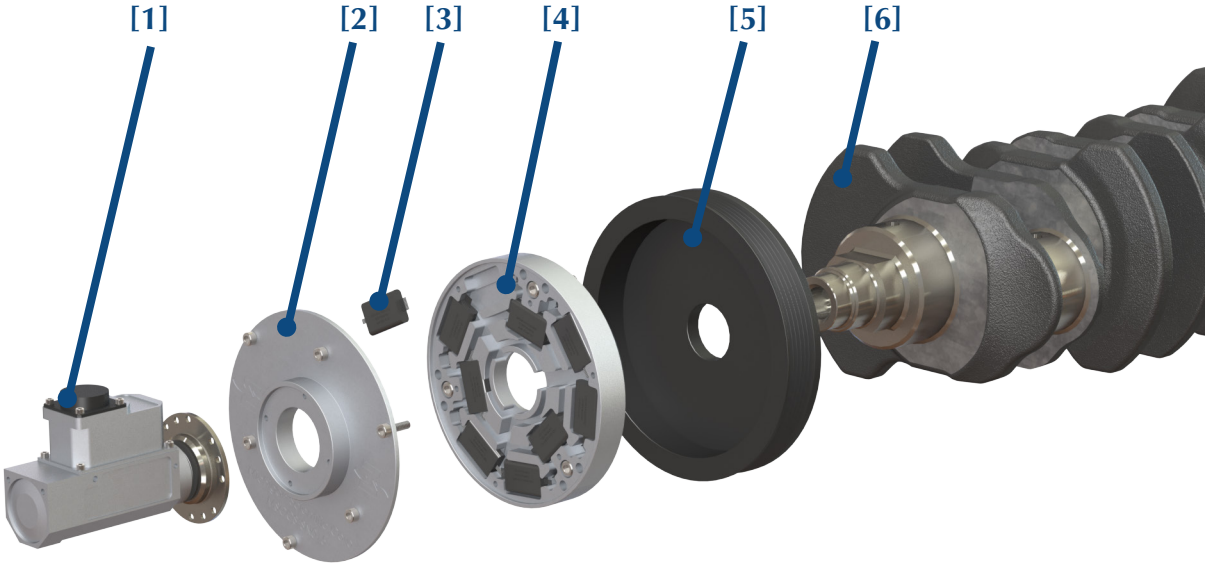

ERT Slip Ring Assembly with Internal Encoder

Signal wires from strain gauges attached to the crankshaft can be routed to a Michigan Scientific ERT Slip Ring Assembly. This rotating signal transmission product is ideal for communicating the signal from the strain gauges on the rotating part to the stationary data acquisition. It is common to mount a slip ring to the engine damper. Using a slip ring with an internal encoder for signal transmission also allows for the angular speed and the position of the crankshaft to be measured. All of this data is crucial in engine and crankshaft studies.

Assembly Components

[1] Slip Ring Assembly
[2] Cover
[3] Strain Gage Amplifier
[4] Amplifier Housing
[5] Harmonic Balancer
[6] Crankshaft

Rotating Shaft

Common measurements on rotating shafts include temperature monitoring, torque, and strain measurements. Taking measurements on rotating shafts can be challenging, but Michigan Scientific offers a variety of products designed to be mounted on shafts of various sizes located in hard-to-reach places.

Tubular Slip Ring Assemblies

Michigan Scientific Tubular Slip Ring Assemblies can be mounted directly on shafts up to 50 mm (2.00”) in diameter. As the shaft rotates, the rotor spins with the shaft while the ring and brush interface transmit the signals from the rotating shaft to the stationary brush. These signals could be from strain gauges, thermocouples, accelerometers, or other sensors, and are passed to data acquisition. They are designed to fit on shafts ranging from 1.2 inches to 3.2 inches in diameter and are available in 4 to 8 slip ring connections.

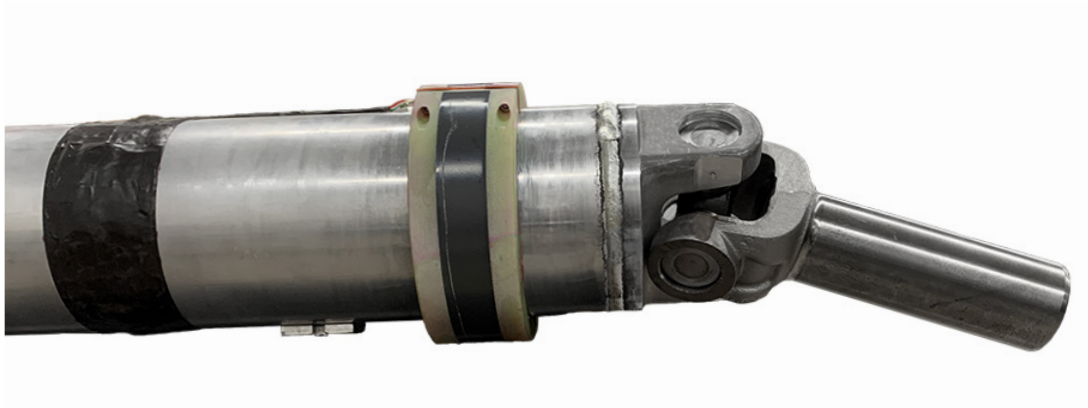

Split Collar Telemetry

Michigan Scientific Split Collar Telemetry and Induction System (TEL-SC) is a reliable, convenient, and accurate product to get signals off of driveshafts. TEL-SC is a non-contact system that allows the users to attach the system without modifying or disassembling shaft ends. They are weatherproof and ideal for long term field testing. Its digital wireless link make the TEL-SC useful for applications with limited space surrounding the shaft. Single or multiple connections are available. They are designed to fit on shafts as small as 0.475 inches.

Wheel

The wheel is a common place to measure force, torque, and speed. Measurements at the wheel are crucial for agriculture vehicle testing including: computer model validations, durability testing, power comparisons, traction studies and power efficiency measurements.

Wheel Force Transducer

Michigan Scientific Corporation Wheel Force Transducers (WFT) output three forces, three moments, two accelerations, wheel speed, and wheel position signals to provide complete spindle load data with extreme accuracy. Every system combines a high strength, lightweight transducer with weatherproofed protective coatings for superior reliability and durability in a variety of field and weather conditions.

Wheel Torque Transducer

Michigan Scientific Corporation designs and manufactures highly sensitive Wheel Torque Transducers to measure drive and braking torque. The transducers are attached to adapters that duplicate the critical dimensions of the original rim and hub. Due to the high strength material and weatherproof sealing, the assemblies can be used in all field conditions.

Combustion Chamber

With growing concern about fuel economy, compression ratio is a key variable in determining the performance and fuel efficiency of an engine. Testing for cylinder volume and compression ratio is necessary for laboratory development, manufacturing quality verification, and competitive bench-marking. Tests of this type are useful in field measurements as well such as verifying compression ratio and monitoring changes over time.

CompRatio-D4(E)

The CompRatio-D4(E) accurately and quickly measures engine cylinder volume with new proprietary acoustic technology. An adapter and the D4(E) probe easily replaces the standard glow plug or spark plug.. The system accurately measures a wide range of cylinder volumes and quickly displays the measured volume within seconds. The D4(E) measurement system is designed to be easily integrated into the vehicle. It contains a DC powered interface electronics box with a digital readout of the volume obtained from the short measurement probe, allowing it to get into tight spaces.

Steering Wheel

The development and testing of a vehicle's steering system can be improved and verified through measurement of steering torque and steering angle. Tests can be done in both the laboratory setting and during normal use.

SW-SR2

The SW-SR2 has the option of mounting to the existing vehicle steering wheel or to replace the existing steering wheel by mounting directly to the splined steering shaft. The SW-SR2 is a strain gauge based sensor made from high strength stainless steel and is fully temperature compensated. The steering angle signal is generated from a high resolution inductive encoder. The SW-SR2 has a ±1440 degree multi-turn encoder and both Analog and CAN signal outs. The SW-SR2 utilizes a high quality Michigan Scientific slip ring assembly for signal transmission. The torque transducer and steer angle sensor are powered and controlled by a Michigan Scientific Digi-Steer Control Unit.

Flywheel/Flexplate

Flexplate/flywheel torque measurements are often used for engine and transmission development in both combustion and hybrid powered vehicles. This allows for accurate and reliable benchmarking and vehicle efficiency analysis. Tests can be completed in laboratory or field settings.

Flexplate Telemetry Torque Measurement System

The Telemetry Torque Measurement System measures engine torque with a custom transducer installed between the engine and transmission. It is designed to take the place of a stock flexplate or flywheel without the need for any engine or transmission modifications. The transducer is telemetry based, allowing engine torque data to be transmitted from the rotating system to a stationary receiver via a radio frequency signal. Three channel systems are available for torque, thrust, and temperature measurements.

Implements

Tractor implements greatly impact the operation of a tractor. Michigan Scientific produces precision testing instruments designed to measure speed, torque, force, and strain that can be used during development and validation testing. Recommended products are outlined in this chapter.

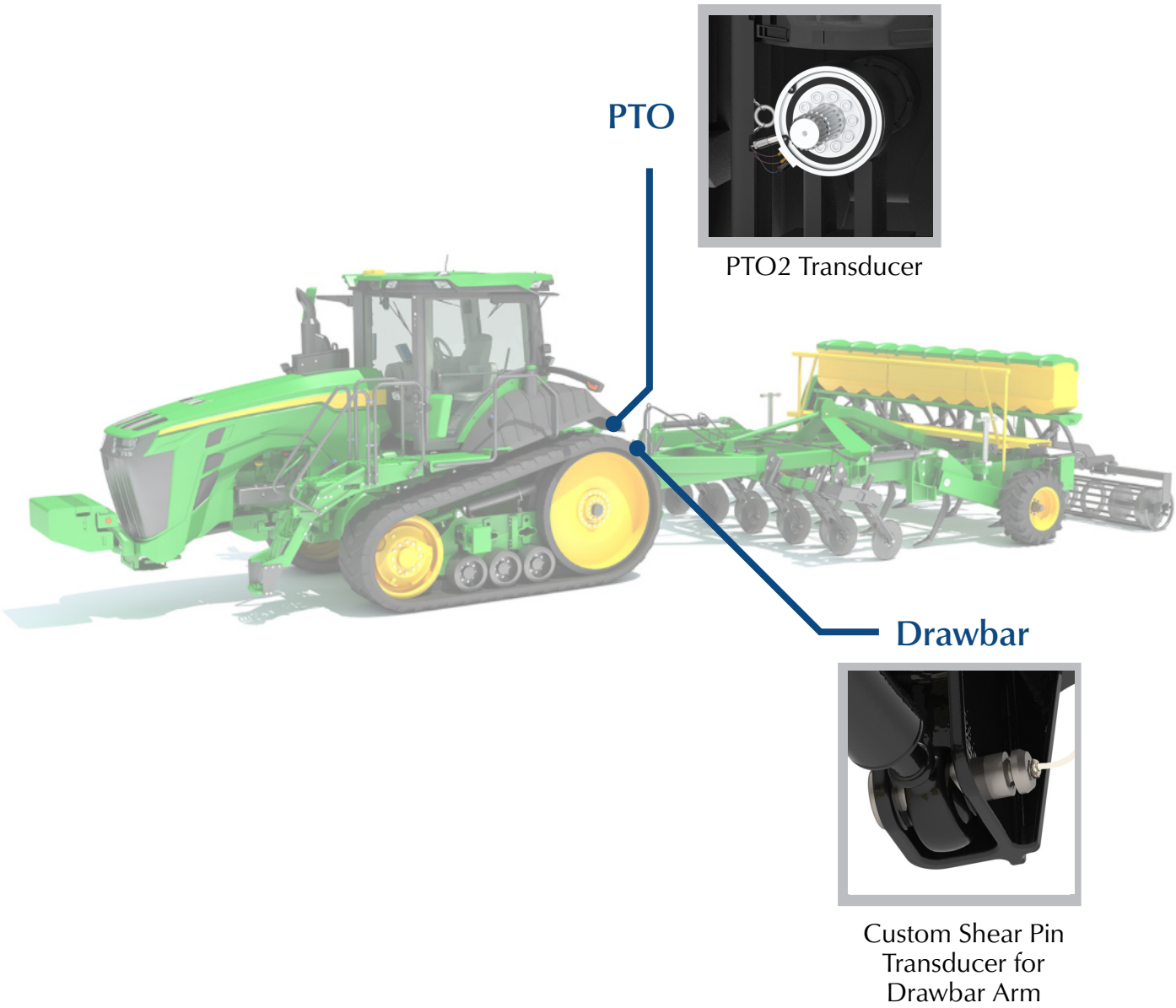

Drawbar

In tractors that uses drawbars to pull an implement, a shear pin can be gauged to measure forces that can be used in a number of testing purposes. Common vehicle dynamics that can be deduced from an instrumented drawbar include drawbar pull and tractive efficiency. These forces are crucial for measuring how the implement effects the vehicles efficiency.

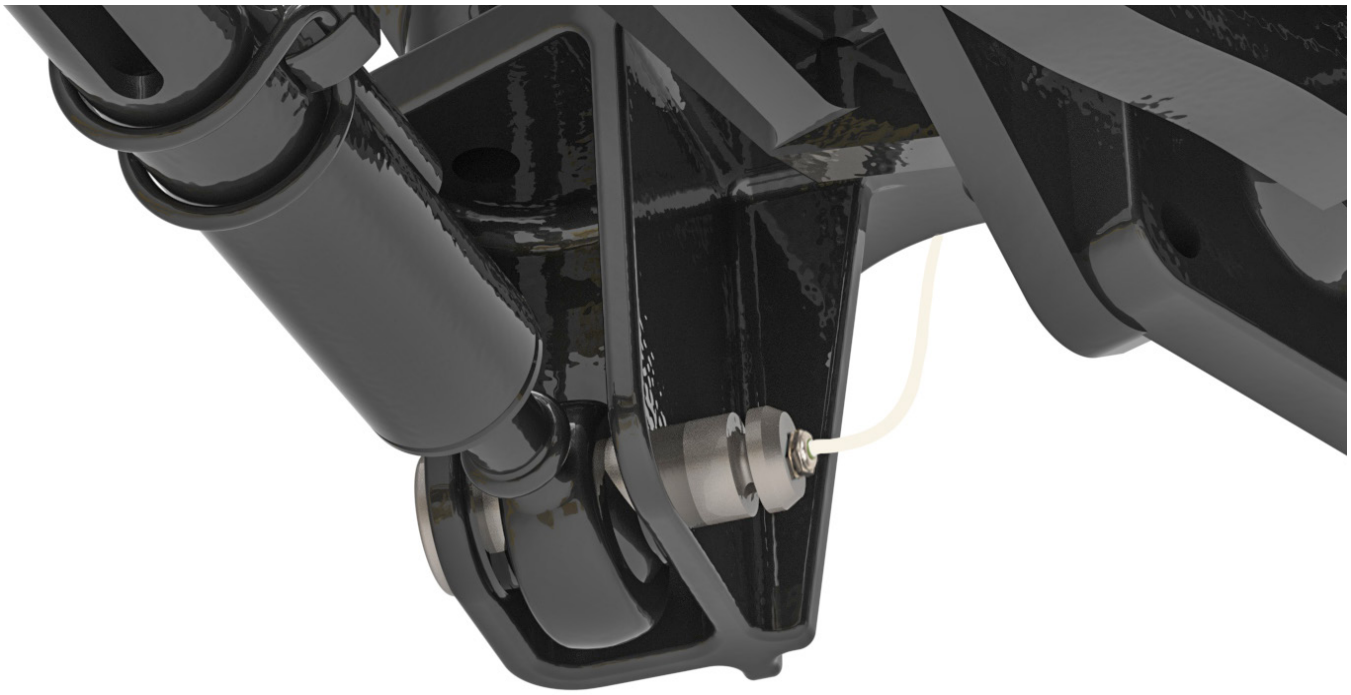

Custom Drawbar Shear Pin Transducer

Shear Pin transducers are intended to replace an OEM pinned or bolted joint in the vehicle. Each is custom designed and machined to fit the application. The Shear pin transducers can be designed and strain gauged to measure one or two axes of force perpendicular to the shear pin. The transducers are all machined from transducer-grade stainless steel and have a weatherproof coating. Our shear pin transducers are suitable for in-field data collection in addition to laboratory test setups.

Power Take-Off

Understanding the torque, shaft speed, and power being transferred through the power take-off (PTO) shaft is crucial for developing a tractor's transmission and effectively utilizing the vehicle's power. Field tests can be useful in determining vehicle efficiency for real-world applications.

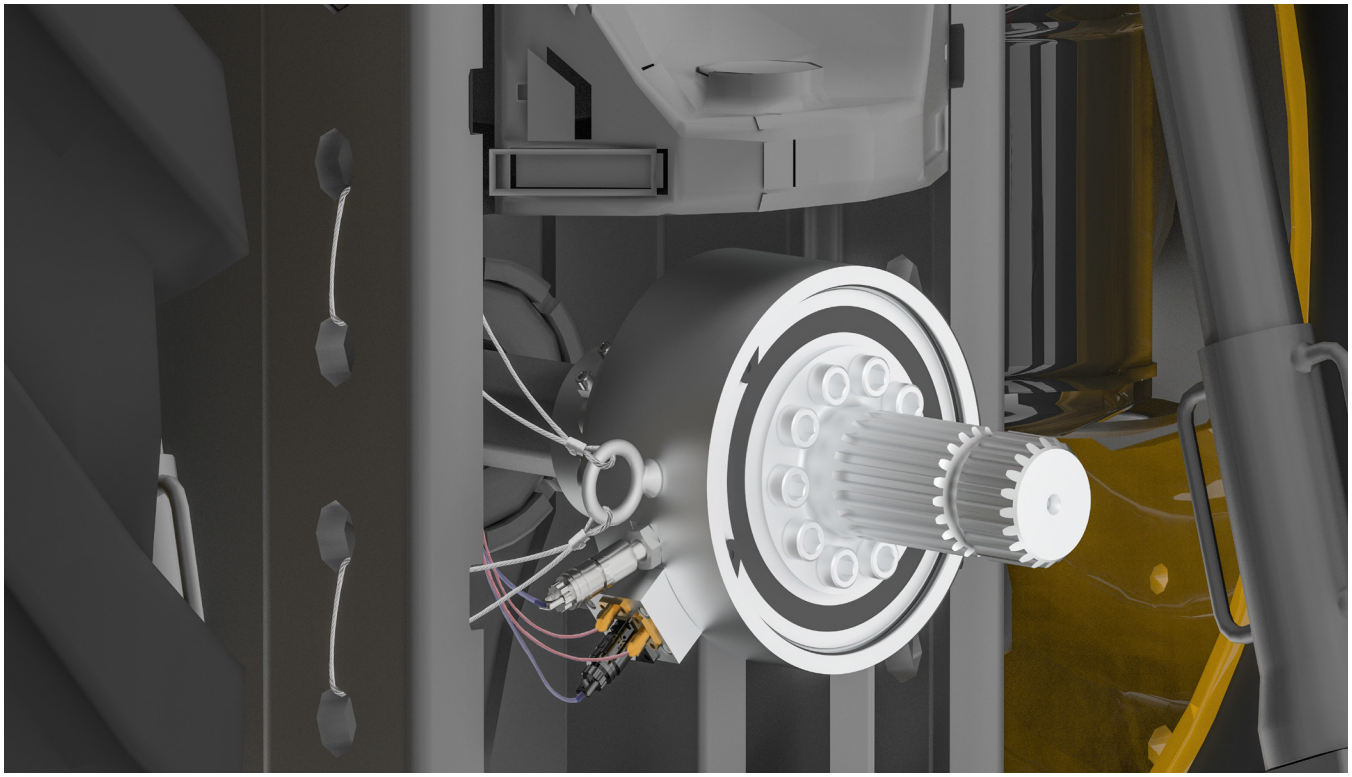

PTO2 Torque Transducer

The Michigan Scientific PTO2 Torque Transducer is designed to measure the torque and speed of a power take-off (PTO) shaft with no modifications to the machine or implement. The PTO2 Torque Transducer's female spline mates directly to the machine's PTO shaft and the Transducer's male spline mates directly with the implement. Both splines contain locking mechanisms to keep the Transducer in place. The PTO2 can be made in various PTO standard sizes.

The transducer has an integrated B4-2W/E60 Slip Ring and encoder system. The full bridge strain gauge signals are transmitted across the instrument quality slip ring while a hall effect sensor and mounted tone wheel provide a 60 pulse per revolution speed signal.

Harvesting Equipment

Harvesters include systems for several harvesting operations. Testing the operation of these systems can lead to greater fuel efficiency and productivity. Michigan Scientific produces precision testing instruments designed to measure losses in every component of the system to determine where improvement is possible. Recommended products are outlined in this chapter, and customization is available to fit any component.

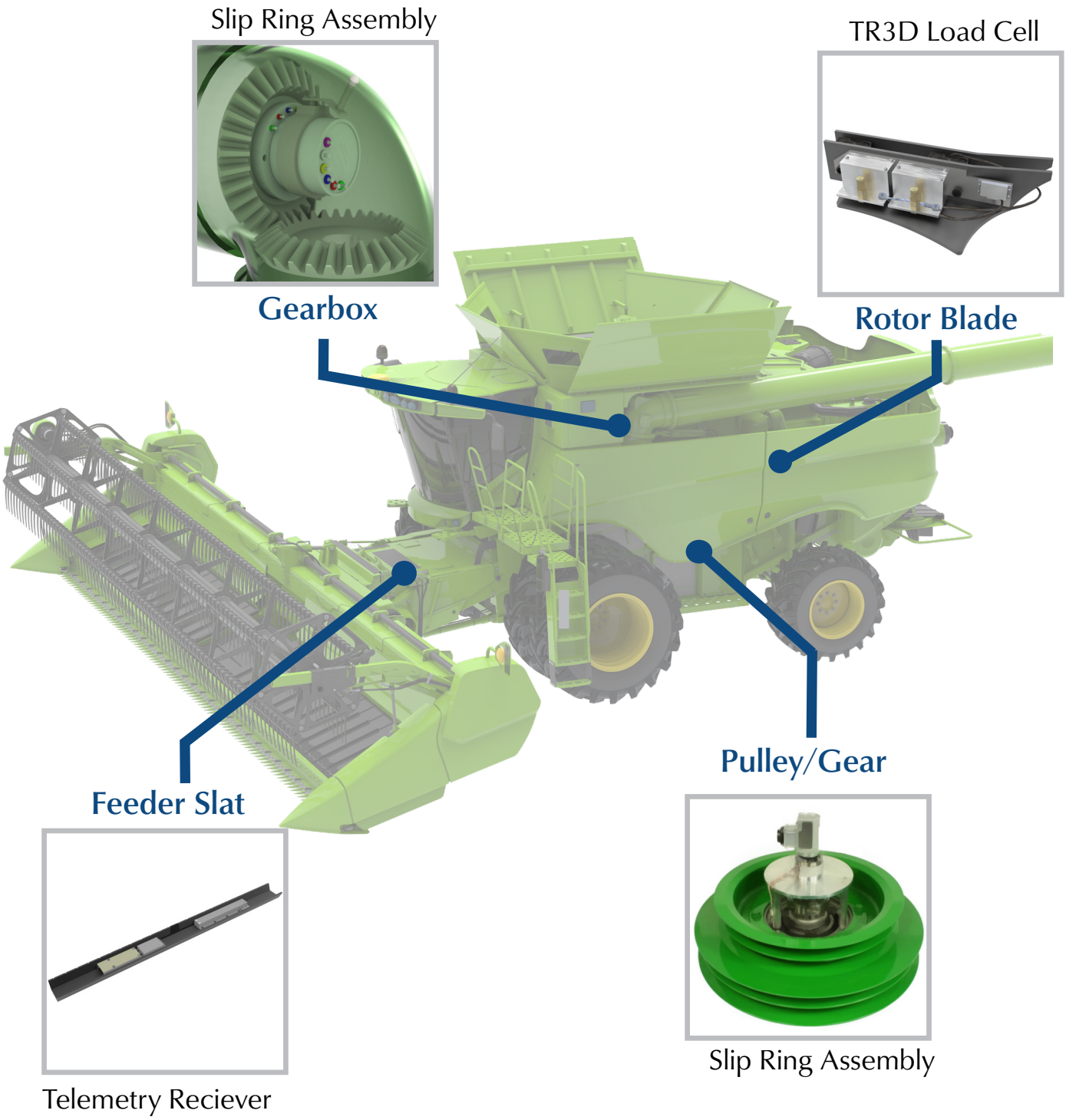

Feeder Slat

Instrumentation of a feeder slat can provide insights into the efficiency of the system. The speed and pitch of chain-and-slat conveyers can heavily influence fuel effiency and grain losses. Understanding the forces experienced by slats can provide crucial insight for development and validation.

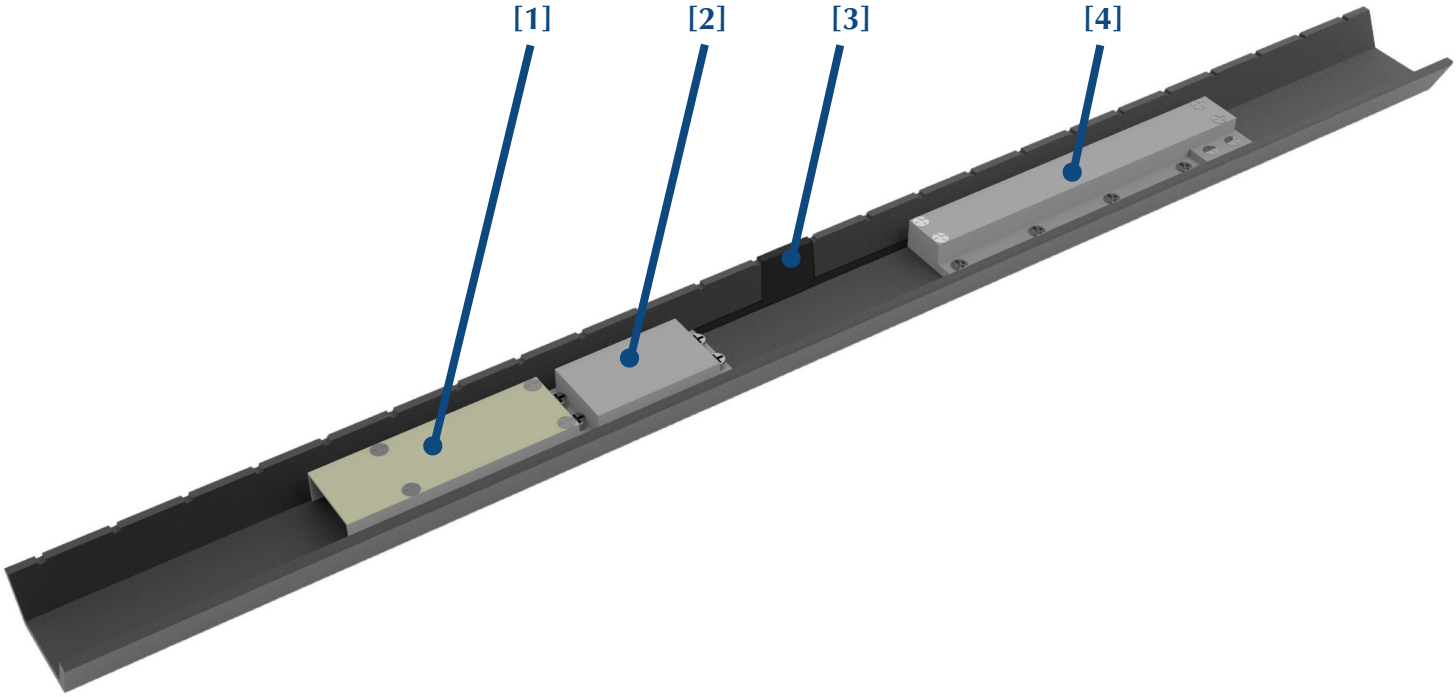

Telemetry Transmitter and Custom Gauging

Michigan Scientific has experience using strain gauges to get measurements from OEM parts. After custom gauging has been installed on a part, our telemetry transmitter can be utilized to get those measurements to a DAQ device. Michigan Scientific telemetry transmitters are used in both laboratory and field testing.

Assembly Components

[1] Telemetry Transmitter
[2] Bridge Completion Resistors
[3] Strain Gauges
[4] Battery Pack

Pulley/Gear

When evaluating performance, knowing the torque and speed and temperature of pulleys and gears offers crucial insight effeincy. Using strain gauges and thermocouples to instrument OEM parts allows for real-world measurements. Slip rings are a reliable solution for getting these measurements to a DAQ device, in both laboratory and field tests.

Slip Ring Assemblies and Custom Torque Transducer

Michigan Scientific can instrument pulleys and gears, including the gear teeth, to test speed, torque, strain, and temperature they experience when in use. These instrumentation solutions can be used for long-term test during general use or for specific test conditions with unknown conditions. Michigan Scientific Slip Rings are a reliable and durable method used to transfer data from the part to a DAQ system.

Gearbox

The elbow gearbox on an unloading auger is necessary for transferring harvested goods into a truck or cart. On a combine, the unloading auger adjusts its position to be over the transfer location. Gears power the auger to move harvested goods through the auger tube. Michigan Scientific precision instruments can test the speed, torque, and temperature of the elbow gearbox to see where improvements can be made for a more increased durability and efficiency.

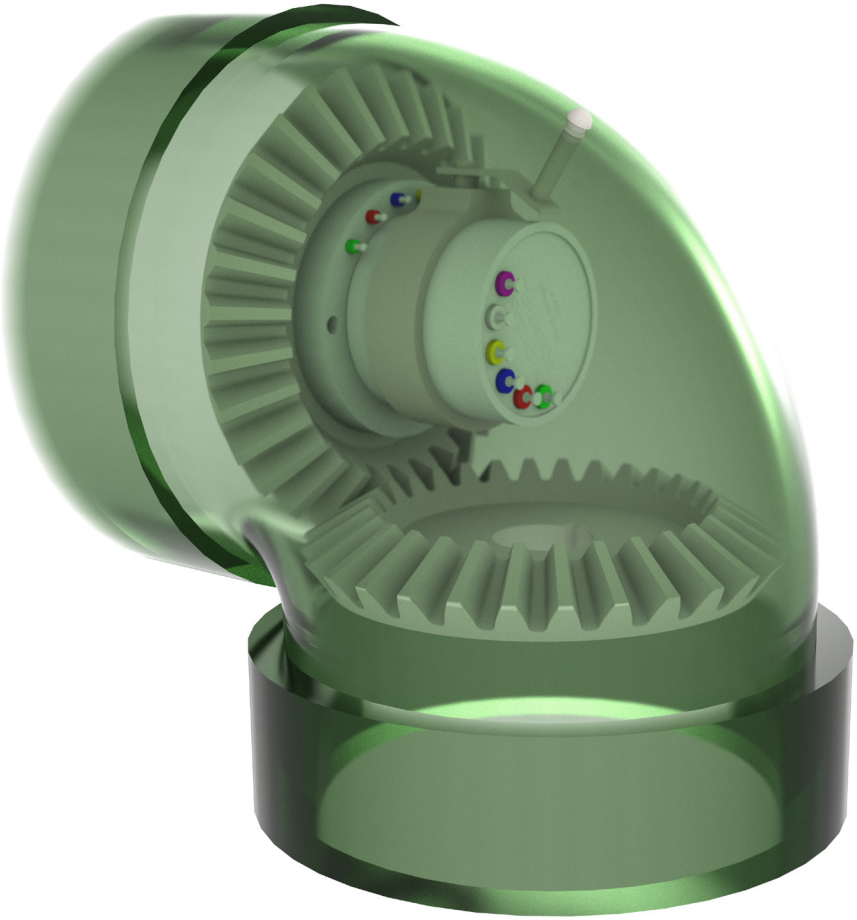

Slip Ring Assemblies

The Michigan Scientific S-Series Slip Ring Assemblies are compact, allowing them to fit inside the elbow of the gearbox. This rotating signal transmission product is ideal for communicating the signal from the strain gauges on the rotating part to the stationary data acquisition.

Rotor Blade

Rotor blades impact fuel efficiency as well as crop loss. Using multi-axis load cells offers a simple solution for measuring forces in rugged environments, such as on combine rotors. Telemetry can offer a solution to getting those measurements from the rotor to a DAQ device.

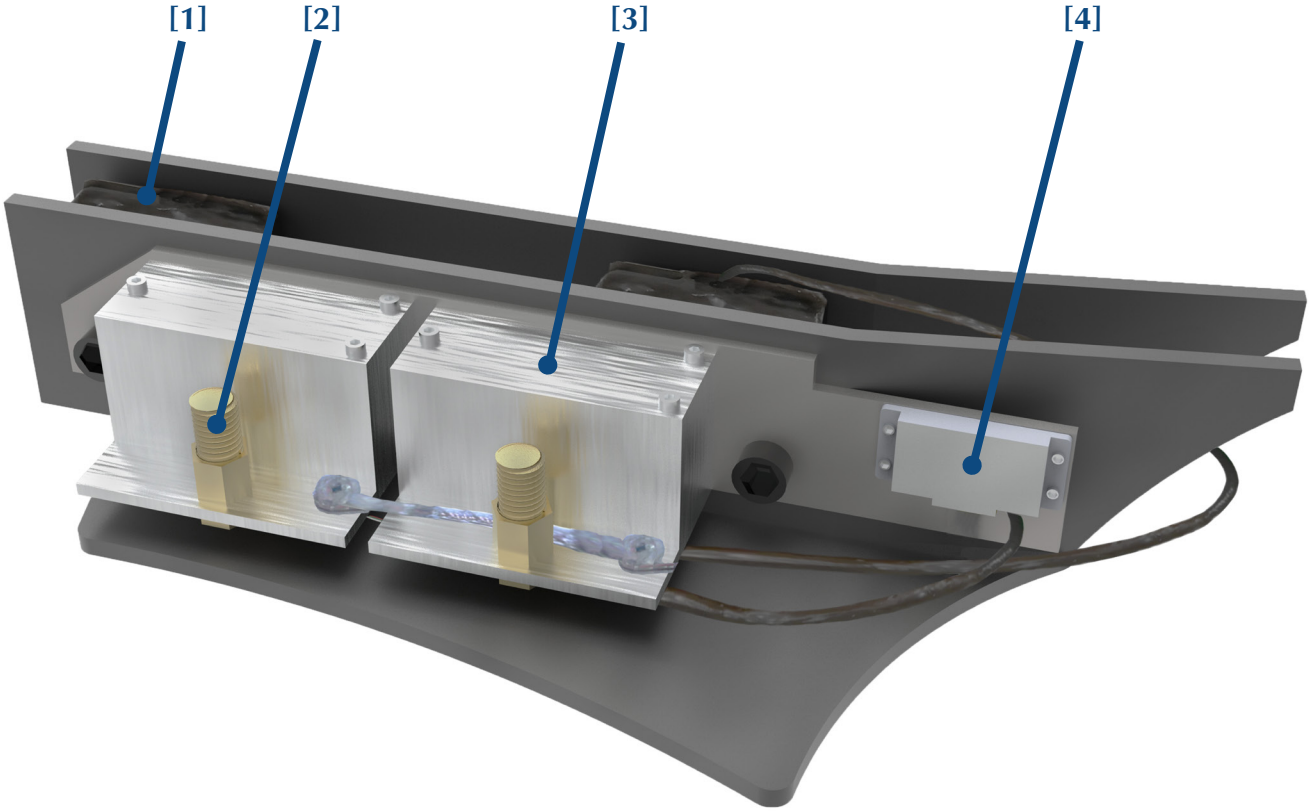

Three Axis Load Cells

Michigan Scientific offers a variety of load cells to meet load capacity and size needs. Our rugged Three Axis Load Cells can be used in harsh environments without sacrificing accuracy. Michigan Scientific telemetry transmitters can be utilized to transfer measurements from the rotor.

Assembly Components

[1] Three Axis Load Cell
[2] Rugged Antenna
[3] Battery
[4] Telemetry Transmitter