Michigan Scientific Corporation

# Multi-Axis Load Cell Transducers

## LOAD CELL SPECIFICATIONS

| Model | Maximum Load Capacity (per channel) | Maximum Moment Capacity (per channel) | Fatigue Rated Load Capacity for Single Axis | Nonlinearity |
|---|---|---|---|---|
| TR3D-A-1K | 1,000 lb (4.4 kN) | 30 lb-ft (40 N-m) | 380 lb (1.7 kN) | <0.5% of full scale output |
| TR3D-A-3K | 3,000 lb (13.3 kN) | 160 lb-ft (215 N-m) | 2,500 lb (11.1 kN) | <0.5% of full scale output |
| TR3D-A-5K | 5,000 lb (22 kN) | 210 lb-ft (280 N-m) | 3,750 lb (16.6 kN) | <0.5% of full scale output |
| TR3D-A-5/5/10K | X & Y axes 5,000 (22kN) Z axis 10,000 lb (44kN) | 270 lb-ft (365 N-m) | 4,200 lb (42 kN) | <0.5% of full scale output |
| TR3D-B-250 | 250 lb (1.1 kN) | 12 lb-ft (16 N-m) | 250 lb (1 kN) | <0.5% of full scale output <0.5% of full scale output |
| TR3D-B-1K | 1,000 lb (4.4 kN) | 48 lb-ft (65 N-m) | 1,000 lb (4.5 kN) | <0.5% of full scale output |
| TR3D-B-4K | 4,000 lb (17.8 kN) | 165 lb-ft (220 N-m) | 2,500 lb (11 kN) | <0.5% of full scale output |
| TR3D-B-4500 | 4,500 lb (20 kN) | 130 lb-ft (175 N-m) | 3,100 lb (13.8 kN) | <0.5% of full scale output |
| TR3D-B-16K | 16,000 lb (71 kN) | 1,300 lb-ft (1,760 N-m) | 12,350 lb (55 kN) | <0.5% of full scale output |
| TR3D-C-10K | 10,000 lb (44 kN) | 500 lb-ft (675 N-m) | 8,000 lb (35 kN) | <1% of full scale for X and Y axes <2% of full scale for Z axis |
| TR3D-C-16K | 16,000 lb (71 kN) | 1,300 lb-ft (1.7 kN-m) | 12,000 lb (53 kN) | <1% of full scale for X and Y axes <2% of full scale for Z axis |
| TR3D-C-40K | 40,000 lb (177 kN) | 4,400 lb-ft (5.9 kN-m) | 24,000 lb (106 kN) | <1% of full scale for X and Y axes <2% of full scale for Z axis |
| TR3D-D-50K | 50,000 lb (222 kN) | 14,000 lb-ft (19.0 kN-m) | 35,000 lb (155 kN) | <1% of full scale for X and Y axes <2% of full scale for Z axis |
| TR3D-D-100K | 100,000 lb (444 kN) | 16,000 lb-ft (21 kN-m) | 70,000 lb (310 kN) | <1% of full scale for X and Y axes <2% of full scale for Z axis |
| TR5D-B-5K | 5,000 lb (22 kN) | 4,000 lb-ft (450 N-m) | | <0.5% of full scale output |
| TR6D-C-40K | 40,000 lb (178 kN) | 7,000 lb-ft (9.5 kN-m) | 24,000 lb (106 kN) | ≤0.5% of full scale for X and Y axes; ≤1.5% of full scale for Z axis Moments ≤0.5% of full scale for all channels |

* Temperature Range, Usable: -40˚F to 300˚F (-40˚C to 150˚C)

Michigan Scientific Corporation (MSC) has decades of experience designing and manufacturing multi axis load cells. These strain gauge-based transducers are ideal for simultaneously measuring forces in multiple axes in a variety of scenarios. Designed for easy mounting and to fit into applications where space is limited, these load cells provide accurate, reliable results.

Each load cell transducer is machined from a solid block of stainless steel or aluminum, which ensures excellent linearity throughout the entire force range, as well as minimal hysteresis. Weatherproof coatings are applied to all strain-gauged surfaces to ensure the load cell will survive in almost any environmental condition experienced in industrial or automotive applications.

Careful consideration of the load paths through the transducer and its strain gauge elements minimize sensitivity to erroneous off-axis loading, otherwise known as “crosstalk.” As a result, each measurement axis maintains immunity to interference caused by loading the other axes.

Michigan Scientific load cells have been used extensively across an array of industries. From automotive testing to motorcycle measurements, robotic development to production industries; MSC load cells consistently provide innovative and reliable solutions to any testing application.

# Load Cell Applications

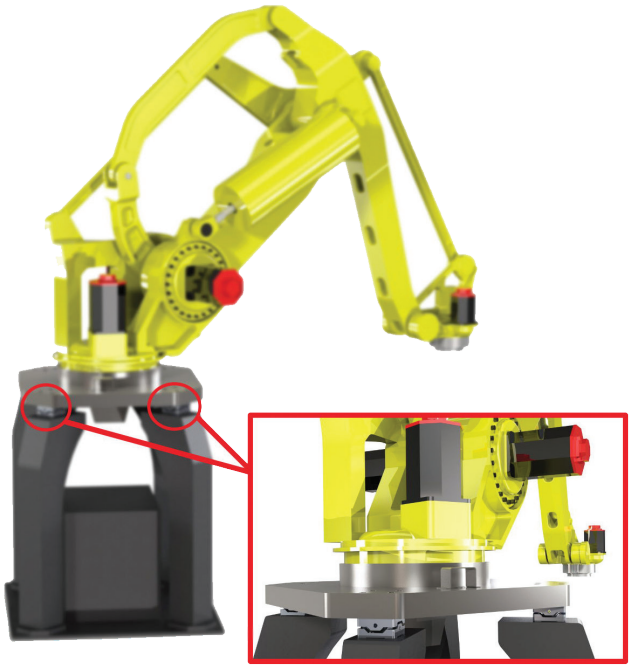

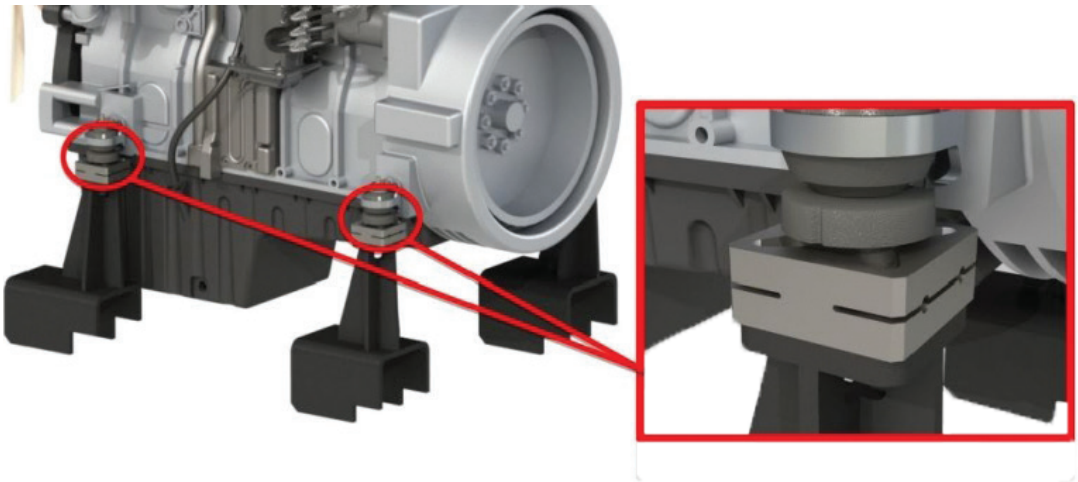

# Related Products

## SGA3A THREE CHANNEL STRAIN GAGE AMPLIFIER BOX

The Michigan Scientific SGA3A Strain Gage Amplifier Box is ideal for use with any of MSC's wide variety of Three Axis Load Cells.

## TRANSDUCER DISPLAY MODULE (TDM)

The Transducer Display Module is designed to provide a quick-read display for strain gauge based load cells.

## PS-DC & PS-AC REMOTE AMPLIFIER CONTROL UNIT

Michigan Scientific's PS-DC or AC Remote Amplifier Control Unit make a complete system for controlling all Michigan Scientific amplifiers.

The PS-DC Remote Amplifier Control Unit accepts 10 to 36V DC input power, while the PS-AC is configured to accept 100 to 240 V AC.

Michigan Scientific Corporation
www.michsci.com

8500 Ance Road
Charlevoix, MI 49720
Tel: 231-547-5511
Fax: 231-547-7070

321 East Huron Street
Milford, MI 48381
Tel: 248-685-3939
Fax: 248-685-5406

Details and specifications provided in this document are purely for informational purposes and are subject to alterations. No liability is accepted for errors or omissions.

©2018 Michigan Scientific Corporation

REV: 7/23/18