# Michigan Scientific Corporation Wheel Force Transducer System

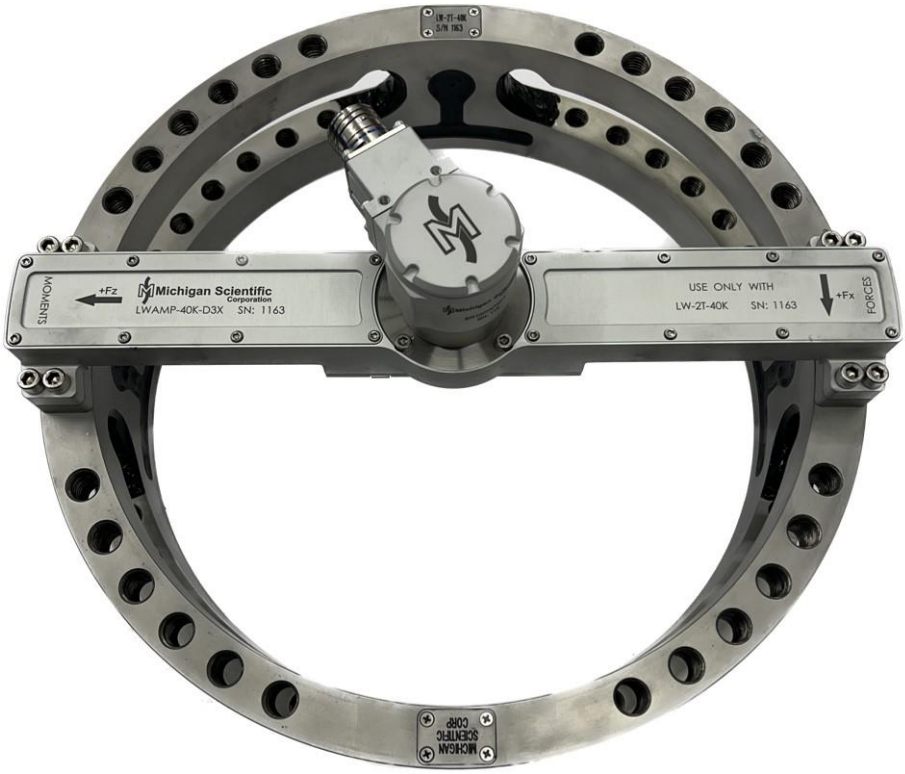


## Model: LW-2T-40K
## for Slip Ring set-ups

*For commercial Trucks, skid steers, & fork lift trucks*

MICHIGAN SCIENTIFIC
Corporation

March 2024

Revision 2.0a

# Technical Support

For technical support, contact Michigan Scientific Corporation.

Michigan Scientific Corporation

Milford, MI Location

321 E. Huron St.

Milford, MI 48381 USA

ph: 1-248-685-3000

fax: 1-248-684-5406

Charlevoix, MI Location

8500 Ance Rd.

Charlevoix, MI 49720 USA

ph: 1-231-547-5511

fax: 1-231-547-7070

http://www.michsci.com/

mscinfo@michsci.com

wft@michsci.com

# Table of Contents


TECHNICAL SUPPORT ..... 1
INTRODUCTION ..... 5
SPECIFICATIONS ..... 6
MASS OF COMPONENTS, TYPICAL ..... 6
SYSTEM COMPONENTS ..... 7
- TRANSDUCER ..... 7
- CT3 ELECTRONICS ..... 7
- AMPLIFIER AND SLIP RING ..... 8
- HUB ADAPTER ..... 9
- RIM ADAPTER ..... 9
- SIGNAL CABLE ..... 10
- POWER CABLE ..... 10
- USB-A TO USB-C CABLE ..... 10
- CT3 GROUNDING CABLE ..... 11
- CAN BUS CABLE ..... 11
- OPTIONAL ANALOG OUTPUT MODULE ..... 12
- OPTIONAL TINNED LEAD ANALOG OUTPUT MODULE CABLES ..... 12
- OPTIONAL ETHERNET CABLE FOR OPENDAQ ..... 12

SPINNING ASSEMBLY INSTRUCTIONS ..... 13
- BEFORE ASSEMBLY ..... 13
- SINGLE WHEEL RIM ADAPTER INSTALLATION FOR 19.5" & 22.5" RIMS ..... 14
- SINGLE/FRONT WHEEL ADAPTER INSTALLATION 16-17" RIMS ..... 19
- DUAL WHEEL RIM ADAPTER INSTALLATION 16-17" RIMS ..... 24
- AMPLIFIER INSTALLATION ..... 28
- AMPLIFIER STAND-OFFS ..... 29

SLIP RING ROTATIONAL RESTRAINTS ..... 31
- STATOR RESTRAINTS FOR REAR (NON-STEERING) WHEELS ..... 31
- STATOR RESTRAINTS FOR FRONT (STEERING) WHEELS ..... 32
- STATOR ANGLE CORRECTION DEVICE (SAC) ..... 32
- OVER THE WHEEL BRACKET ..... 33
- POST PROCESSING STATOR ANGLE CORRECTION METHOD ..... 34

SPINNING ASSEMBLY CABLE CONNECTIONS AND SIGNAL OUTPUTS ..... 36
- *CAN Bus Signal Outputs* ..... *36*
- *Analog Signal Outputs* ..... *36*
- *CT3 Chassis Ground Connection* ..... *37*
- *CT3 Power-up* ..... *37*

CT3 ..... 39
- INTRODUCTION ..... 39

MAIN CT3 SET-UP FUNCTIONS ..... 39
IMPORTANT CT3 WEBSITE SELECTIONS ..... 39
CT3 BASICS ..... 40
- LIGHTS AND CONTROLS ..... 40
- POWERING UP ..... 40
- DISPLAY ..... 40

POSITION ..... 40
ZERO ..... 41
ZERO ANGLE ..... 41
SHUNT ..... 41
MODE ..... 42
FAULT ..... 42
CONNECTORS ..... 42
MULTIPLE CT3S ..... 43
POWER REQUIREMENTS ..... 44
INDIVIDUAL CT3 SHUNT OR ZERO ..... 44
SIGNAL OUTPUTS ..... 44
USING CAN SIGNAL OUTPUTS ..... 44
USING ANALOG SIGNAL OUTPUTS ..... 45
SHUNT CALIBRATION SEQUENCE ..... 45
SPINNING USE SYSTEM SET-UP ..... 46
ZEROING ON THE HOIST ..... 46
ROLLING ZERO ON THE ROAD ..... 47
VERIFYING THE ZERO PROCEDURE ..... 48
NON-SPINNING USE – SYSTEM SET-UP ..... 48
STATIONARY ZERO ..... 49
WEB PAGE SELECTABLE OPTIONS ..... 50
CT3 SERIAL NUMBER/WHEEL POSITION ..... 51
DEFAULT COORDINATES ON POWER-UP ..... 52
FULL SCALE VELOCITY ..... 52
ANALOG OUTPUT SENSITIVITIES OPTIONS. ..... 53
CHANGING ANALOG OUTPUT RANGE ..... 53
SYNCHRONIZATION SETTINGS: ..... 53
SLIP RING/ENCODER REFERENCE ANGLE ..... 53
MEASUREMENT ORIGIN ..... 54
NON-SPINNING APPLICATIONS ..... 55
CHANGING WFT COORDINATE SYSTEM ..... 56
STATIC VALUES ..... 57
TRANSDUCER INFORMATION ..... 57
CT3 CAN BUS CONFIGURATION ..... 58
*Maximum Output/Sample Rates with CAN 2.0* ..... *60*
*Delay* ..... *60*
*Unit Selection* ..... *60*
*CAN Bus Termination* ..... *60*
DBC FILE CREATION ..... 60
CT3 INFO ..... 60
NETWORK SETTING ..... 62
DISPLAY MESSAGES ..... 62
SAMPLING FREQUENCY ..... 64
WFT COORDINATE SYSTEM ..... 64
LEFT HAND RULE COORDINATE SYSTEM (OPTIONAL) ..... 65
WEATHERPROOFING ..... 65
RECOMMENDED STATIC LOAD RATING AND OVERLOAD ..... 66

TRANSDUCER FIELD CHECKS ..... 66
FACTORY CALIBRATION ..... 67
OPTIONAL TRANSDUCER CONNECTOR COVERS ARE AVAILABLE FOR PURCHASE ..... 67
TROUBLESHOOTING ..... 68
APPENDIX 1- WIRING AND SHIELDING ..... 73
CT3 *POWER* CONNECTOR PIN-OUT ..... 73
*PROPER CT3 POWER AND SIGNAL GROUNDING DIAGRAM* ..... 73
CT3 ANALOG OUTPUT MODULE CABLE PINOUT ..... 73
APPENDIX 2 - EXAMPLE QUICK REFERENCE CALIBRATION SHEET ..... 74
APPENDIX 3 – CHANGING AMPLIFIER SMART SENSOR ..... 75

# Introduction

The Michigan Scientific Wheel Force Transducer (WFT) system is a 6-axes transducer that measures forces and moments on a vehicle wheel. Michigan Scientific WFTs around known for their accuracy, reliability, simple installation, ease of set-up, and use.

The WFT gets mounted to a Rim Adapter and hub adapter. Once bolted together, this assembly replaces the production wheel. A standard tire is mounted the rim adapter in the same manner as it is mounted to a production wheel. The system is designed such that all forces and moments on the wheel must pass through the WFT, where they are measured, before being transferred to the vehicle hub.

The WFT has six independent strain gauge bridges that measure the forces and moments. Each WFT contains approximately 100 strain gauge elements. The transducer is designed to have low cross talk between channels and to be insensitive to temperature change and magnetic fields. An Amplifier package gets bolted to the WFT and provides excitation and amplification to the strain gauged bridges. Each Amplifier package has internal ± 100 g Triaxial accelerometers, and also digitizes all signals before transmitting them to the CT3 User Interface. Each Amplifier package contains a removable Smart Sensor. The Smart Sensor contains all the calibration information, last Zero off-set values, and test set-up selections. The Smart Sensor could be removed and installed into a spare amplifier, if needed, without any loss of accuracy.

A consequence of incorporating the sensing elements of the Rotating WFT, is that a Coordinate Transformation is required to provide the output signals in a fixed coordinate system. Coordinate transformation is handled by the CT3 User Interface Box. In addition, the CT3 handles Zeroing, Cross-talk correction, Shunt Calibration system check, Polarity Correction to put all WFTs into a global vehicle coordinate system, and movement of measurement origin. Standard signal outputs for CT3 are CAN 2.0, CANFD, and Ethernet via OpenDAQ. With additional modules, CT3 can provide Analog signal outputs or output through EtherCat. The CT3 has an internal webpage for selecting set-up options, are accessed through USB or Ethernet connection to a laptop or mobile device.

The CT3 can be operates in Spinning Mode for road tests, in which Coordinate Transformation is active, or in Non-Spinning Mode, which is used for non-spinning Test Bench application, like MTS329 or other Vehicle Simulators.

# Specifications

| LW-2T-40K<br>6-Axis Wheel Force Transducer<br>Stainless Steel | | |
|---|---|---|
| *Capacities* | | |
| | | LW-2T-40K |
| Maximum Force Capacity | [Fx, Fz] | 40,000 lb (178 kN) |
| | [Fy] | 20,000 lb (89 kN) |
| | | |
| Maximum Torque Capacity | [Mx, My, Mz] | 30,000 lb-ft (40 kN-m) |
| Acceleration | [Accel X, Accel Y, Accel Z] | 100g |
| Maximum Recommended Static Corner Weight | | 8000 lb. (3635 kg) |

| | |
|---|---|
| Transducer | 6 independent full strain gage bridges |
| Nonlinearity | Less than 0.75% of full-scale output |
| Cross Axis Sensitivity after correction | <1% of full-scale after correction |
| Radial Sensitivity Variation | <1% of radial load |
| Bridge Resistance | 233 to 1400 ohm, axis dependent |
| Transducer Temperature Range | -40 to 125 C (-40 to 257 F) |
| Insulation Resistance from Bridge to Case | Exceeds 1000 Mohm |
| Vehicle Power Input Voltage | 9 to 36 VDC |

| Component | lbs. | kg |
|---|---|---|
| Wheel Force Transducer | 22 | 10.0 |
| Amplifier Package with Slip Ring and Encoder | 2 | 0.9 |
| CT3 Electronics | 2.5 | 1.1 |

# System Components

The Wheel Load Measurement System is made up of multiple components.

## Transducer

Six Axes Wheel Force Transducer. Each transducer has 6 full bridge strain gage outputs, one for each force, and one for each moment.

## CT3 Electronics

CT3 Electronics. This is the User Interface for WFT System. Detailed instructions start on page 39. Pictured above with the CT3 with CT3 baseplate installed.

## Amplifier and Slip Ring

The amplifier provides excitation and amplification for the 6 transducer strain gage bridges. The amplifier package contains internal ±100g X, Y & Z direction accelerometers. The amplifier digitizes the transducer, encoder, and accelerometer signals before they pass through the slip ring. These D3X amplifiers have a removable smart sensor. The smart sensor contains all the calibration information, off-set values, and CT3 webpage settings for the WFT it is mated with.

An instrument quality rugged ten circuit weatherproof Slip ring with 1024-pulse encoder is mounted to the amplifier package. The SR10AW/WFT slip rings have a low profile and high bearing capacity and are especially rugged.

## Hub Adapter

The hub adapter mates to the smaller bolt circle of the transducer and is designed to match the offset of the production wheel. If used in conjunction with rim adapter, proper wheel off-set and brake clearance is maintained.  Standard hub adapters are machined from solid high strength stainless steel.

## Rim Adapter

Michigan Scientific (MSC) makes three types of rim adapters for the LW-2T-40K WFT.
First type is made from solid aluminum forging.  This will be the lightest adapters.
The second type is solid machined steel adapter.  This may be required do to space requirements.
The third type is a welded steel rim adapter.  Because of the welding the recommended static load rating is undetermined.

## Signal Cable

Signal Cable connects from the slip ring to the CT3 Electronics in Spinning Applications. The standard cable length for this model is 9m (30ft). Cable lengths up to 15m available.

## Power Cable

Power Supply cable. This cable is supplied from the factory with no connector on one end. An active fuse is located in the CT3 electronics. The white lead is for 9-36 VDC power high. The black lead is power ground.

## USB-A to USB-C Cable

Connect CT3 to Laptop or mobile device with USB-C cable. After cable is connect, open the web browser go to [www.CT3.local](http://www.CT3.local)

## CT3 Grounding Cable

CT3 Chassis Grounding cable

## CAN Bus Cable

CAN Bus Signal output cable.  They can be made with a DB9 or eDAQ connector on them. CT3s send high speed data through their interconnector, so each CT3 does not need a CAN connector plugged in.

With 4 WFTs, the max sample rate with for one CAN 2.0 Bus is 550 Hz.  With 4 WFTs, the max sample rate with two CAN 2.0 Buses is 1024Hz.

## Optional Analog Output Module

CT3 Analog Output Module.  This module converts digital signals to Analog outputs.

## Optional Tinned Lead Analog Output Module Cables

CT3 Analog Output Module Cables with tinned leads.  Each cable can connect to four channels.

## Optional Ethernet Cable for OpenDAQ

CT3 Ethernet Output Cable.  This can be used to record signals via Ethernet with OpenDAQ standard.

## Spinning Assembly Instructions

This section of the manual describes the assembly of the transducer, wheel and hub adapters, amplifier package, and slip ring.

## Before Assembly

- Be sure that all mating surfaces are free of dirt.
- Inspect mating surfaces for nicks and scratches.
- Use care when assembling the transducer to avoid damage to any part of the system.
- Use care when installing the tire to insure that the adapter mating surfaces and transducer do not get damaged.

**If you will be using balance beads for balancing install them at this time. If you will be using weights for balancing, this must be done after the WFT is assembled to the adapters.**

## Single Wheel Rim Adapter Installation for 19.5” & 22.5” Rims

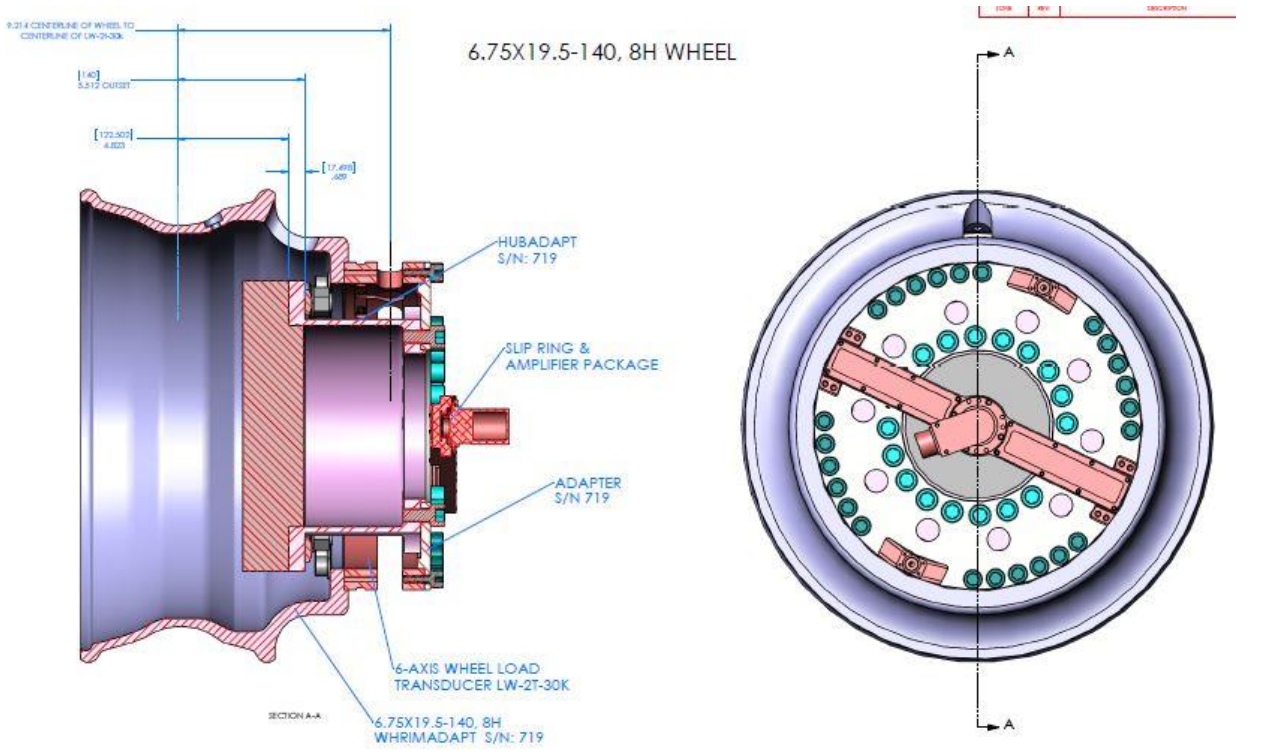


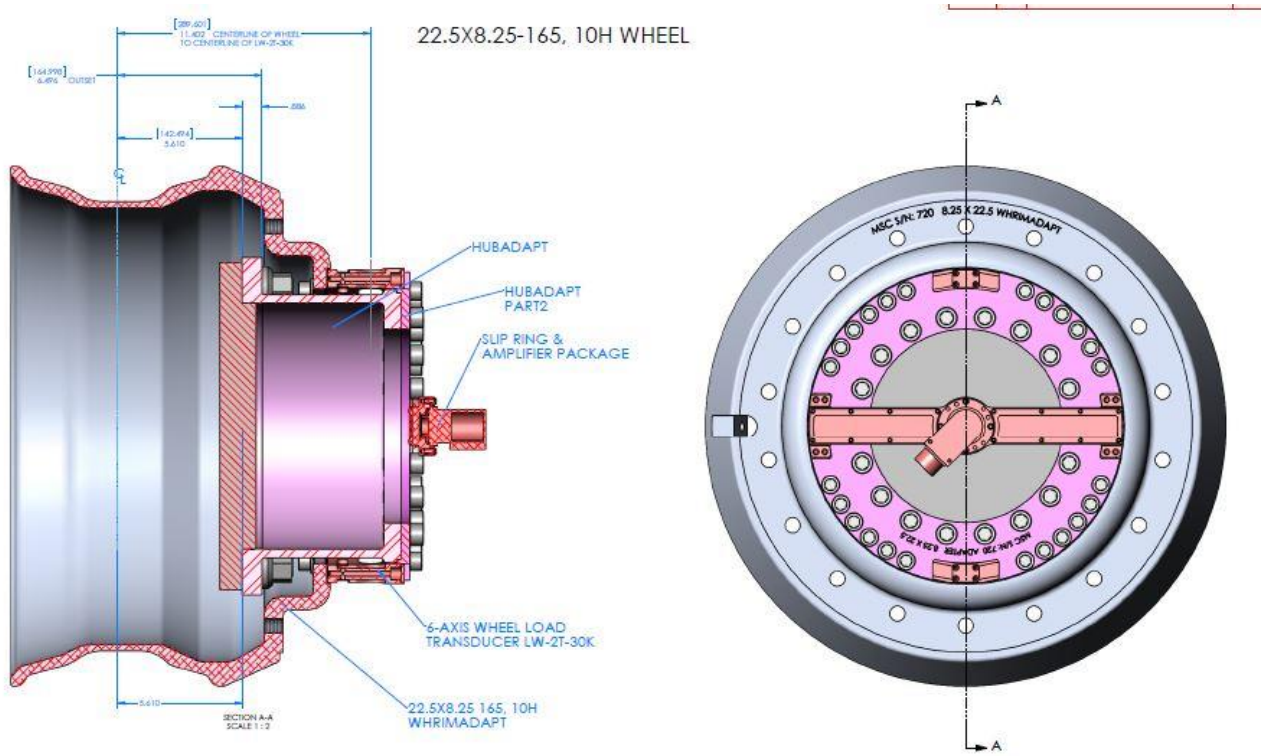


Note: Install the tire onto the rim using the supplied Tire Rim Adapter. Balancing can be done, if desired, after the sensor is installed.

**Rim Adapter With Tire**

**Rim Adapter**

- Place the Transducer onto the Rim Adapter as shown below and install four M14x2.0x50 bolts 90 degrees apart. At this point the modified rim is just used to react the bolt torque.

- Then carefully place the hub adapter plate onto the transducer. Install twenty-four M14x2.0x30 bolts between the Hub Adapter and Transducer, using anti-seize bolt lubricant, and tighten to 110 lb.ft (150 N*M) Torque.

- Turn the entire Wheel assembly over and install the remaining M14x2.0x50 bolts using anti-seize bolt lubricant, and tighten all 24 bolts to 110 lb.ft (150 N*M) Torque.

- Install the Hub Adapter onto the vehicle hub, install production lug nuts and and tighten to manufacturer specified torque

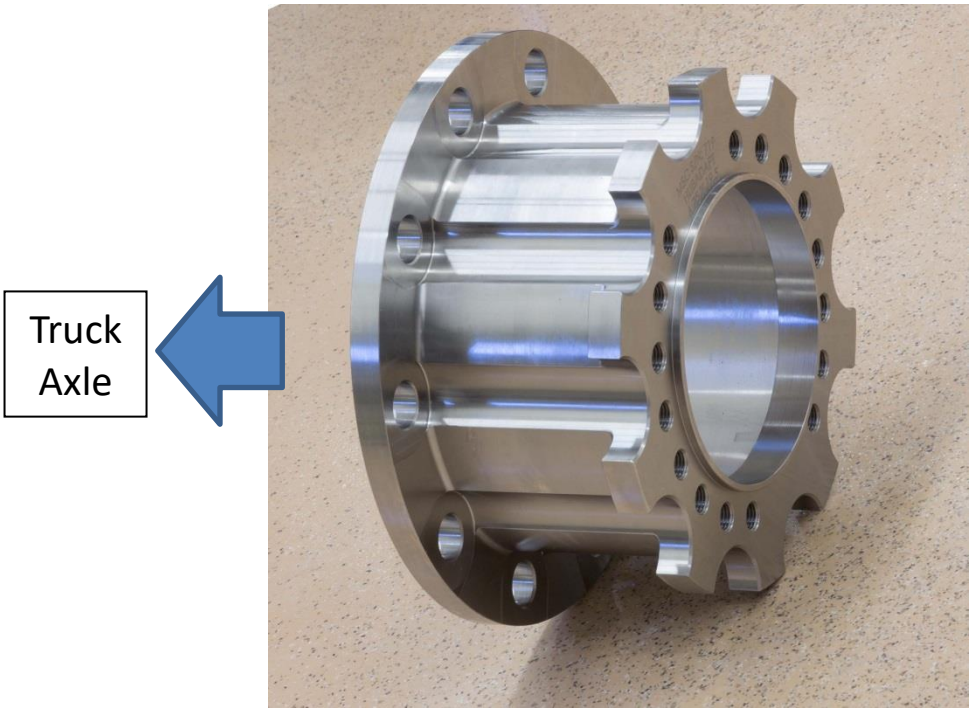

- Install the Wheel Force Transducer Assembly onto the Hub Adapter install 16 M16x30 bolts using anti-seize bolt lubricant, and tighten to 170 lb.ft (225 N.m). Then proceed to mount the Amplifier/Slip Ring.

# Single/Front Wheel Adapter Installation 16-17” Rims

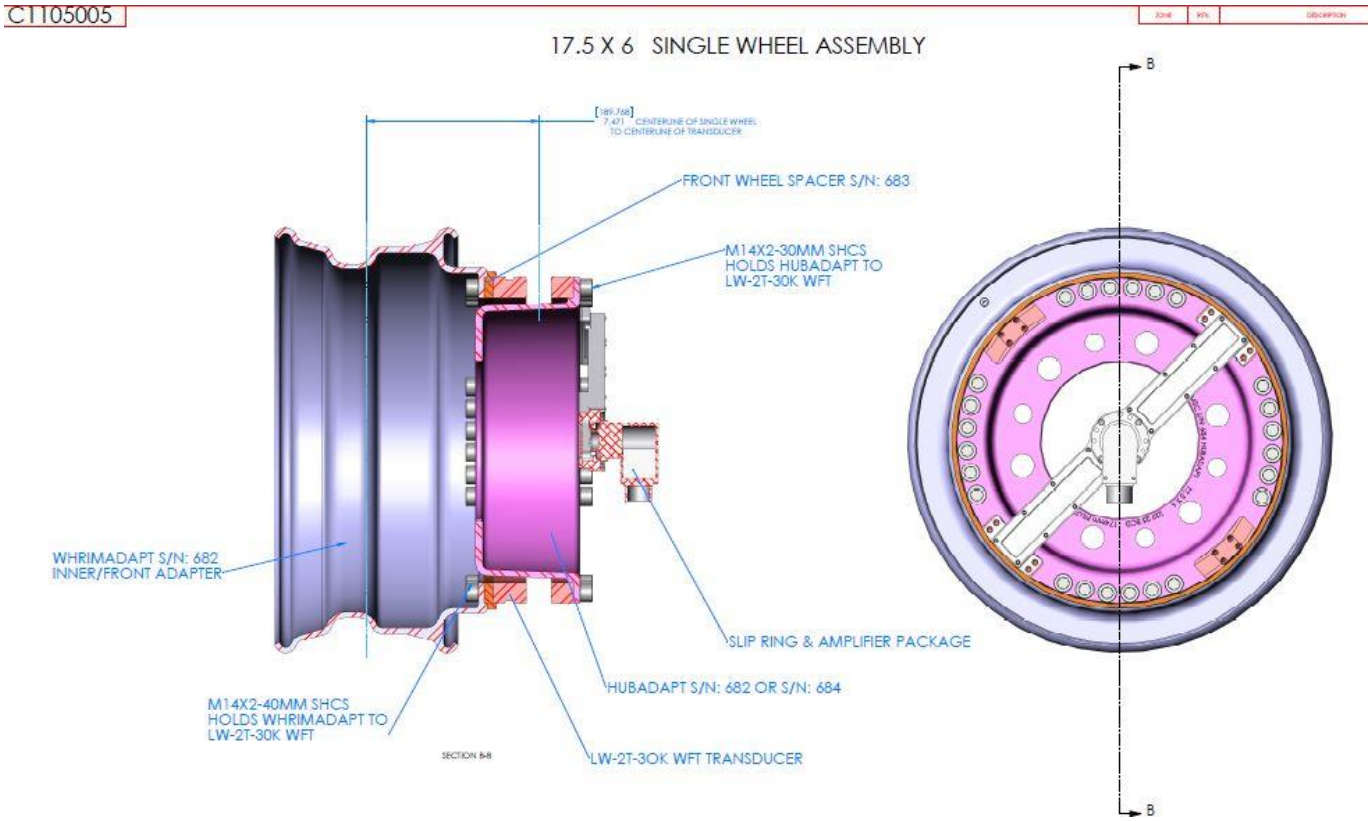

Note: Install the tire onto the rim using the supplied Tire Rim Adapter.  Balancing can be done, if desired, after the sensor is installed.

**Wheel Rim Adapter**

**Tire Rim Adapter With Tire**

- Place the Front Wheel Spacer onto the Wheel Rim Adapter

- Place the Wheel Force Transducer onto the Front Wheel Spacer as shown below. Install four four M14x2.0x40 bolts, using anti-seize bolt lubricant. The four bolts should each be 90 degrees from each other. These bolts are installed on the Inside surface reaching into assembly and hand tightened as shown.

**Wheel Force Transducer Mounted.**
(note: Inside Wheel Force Transducer bolts are started hand tight)

- Place the Hub Adapter onto Wheel Force Transducer as shown below. Install twenty-four M14x2.0x30 bolts, using anti-seize bolt lubricant, and tighten to 150 N*M Torque.

**Tightening Hub Adapter to Transducer Bolts with Torque Wrench and Torque multiplier**
(note: picture does not show mounted tire. Normal Install will have tire already mounted to Rim)

- Turn the Wheel assembly over on the Hub Adapter Bolt heads and install the remaining twenty M14x2.0x40 bolts, using anti-seize bolt lubricant, and tighten all twenty four bolts to 150 N*M Torque.

**Tightening Inner Transducer Bolts with Torque Wrench and Torque multiplier**

(note: picture does not show mounted tire. Normal Install will have tire already mounted to Rim)

- Install the Transducer assembly to the axle. Install ten lug nuts, using anti-seize bolt lubricant, and tighten to customer specified torque. Then proceed to mount the Amplifier/Slip Ring.

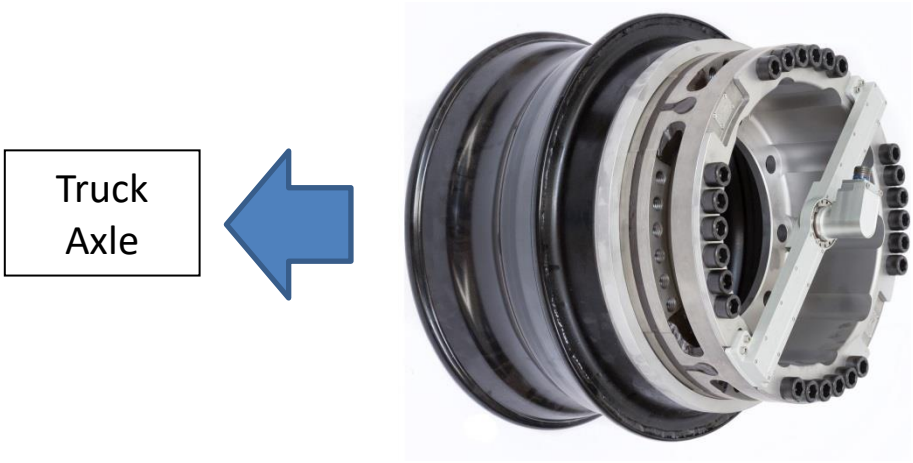


**Transducer Assembly**

# Dual Wheel Rim Adapter Installation 16-17” Rims

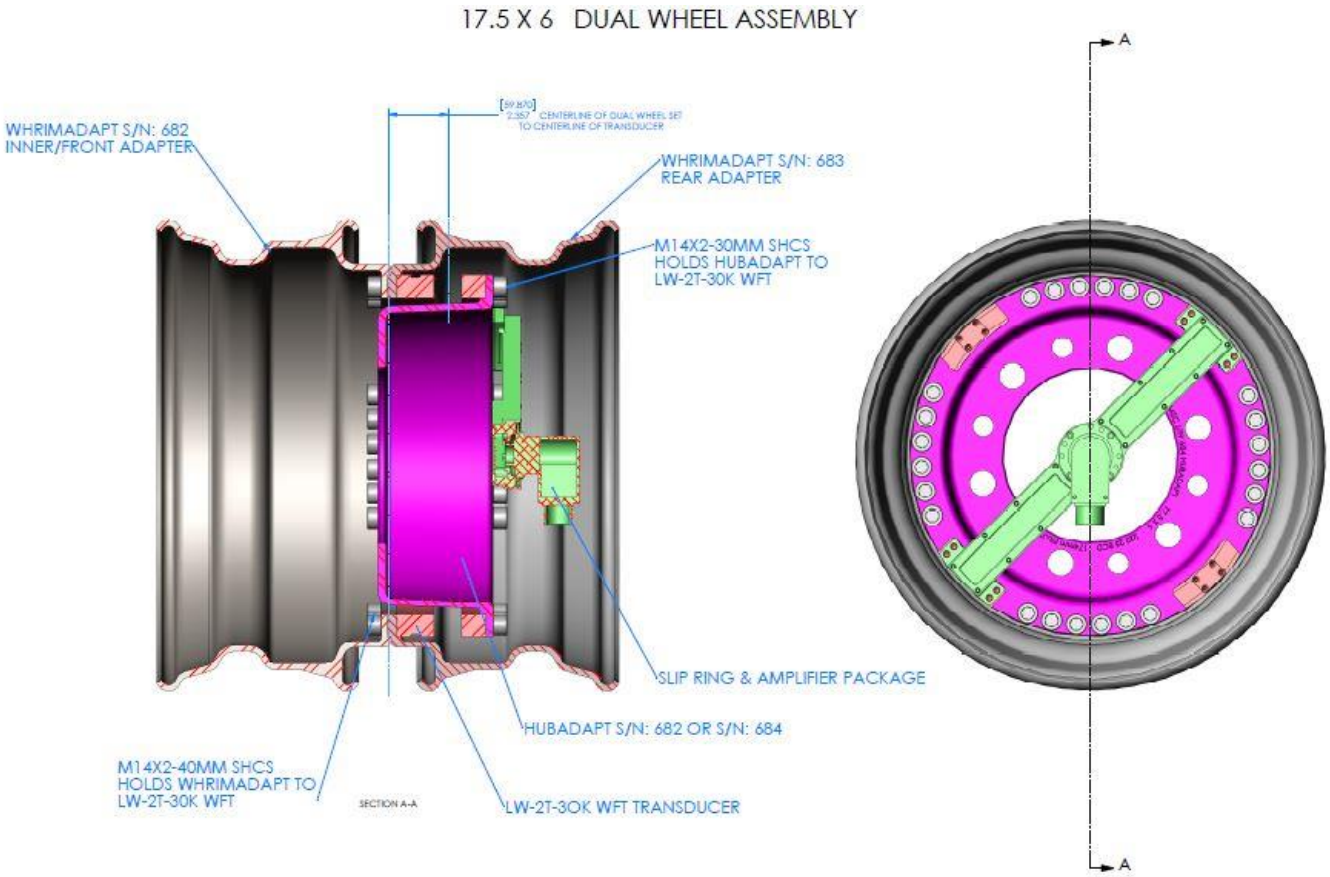

Note: Install the tire onto the rim using the supplied Tire Rim Adapter. Balancing can be done, if desired, after the sensor is installed.

- Mount the Tires to the Rims

**Inside/Front Rim Adapter**

**Outside Rim Adapter**

- Stack the Outside Rim Adapter on top of the Inside Rim Adapter as shown. Carefully install the Transducer into the Outside Rim Adapter as shown. The Transducer will have to be carefully guided past the valve stem of the tire. Deflate the tire as need to get the Transducer past the value stem.

**Outside Rim Adapter stacked on top of Inside Rim Adapter. (Tire not shown)**

**Install Transducer into Outside Rim Adapter**

- Install four M14x2.5x40 bolts, using anti-seize bolt lubricant. The four bolts should each be 90 degrees from each other. These bolts are installed on the Inside surface

reaching into assembly and hand tightened as shown..

- Place the Hub Adapter onto the Transducer and install the twenty four M14x2.0x30 bolts, using anti-seize bolt lubricant, and tighten to 150 N*M Torque.

- Turn over the entire Wheel Assembly so that the Outside Rim Adapter is now touching the ground and install the remaining twenty M14x2.0x40 bolts, using anti-seize bolt lubricant, and tighten all twenty four bolts to 150 N*M Torque.

- Install the Dual Wheel transducer assembly to the axle using a tire jack. Install ten lug nuts, using anti-seize bolt lubricant, and tighten to customer specified torque. Then proceed to mount the Amplifier/Slip Ring package.

## Amplifier Installation

- The amplifier and slip ring assembly is installed after the lug nuts have been tightened. Note that each amplifier and transducer is a matched pair. This is important; data is stored in the amplifier package for each specific transducer.
- O-rings are used to provide weatherproof sealing between the amplifier housing and the transducer. Make sure the O-rings are in their proper place before installing the amplifier package.
- There are dowel pins on the transducer to insure proper orientation of the amplifier housing. Align the dowel pins on the transducer to the dowel pin holes on the amplifier to ensure proper amplifier orientation.

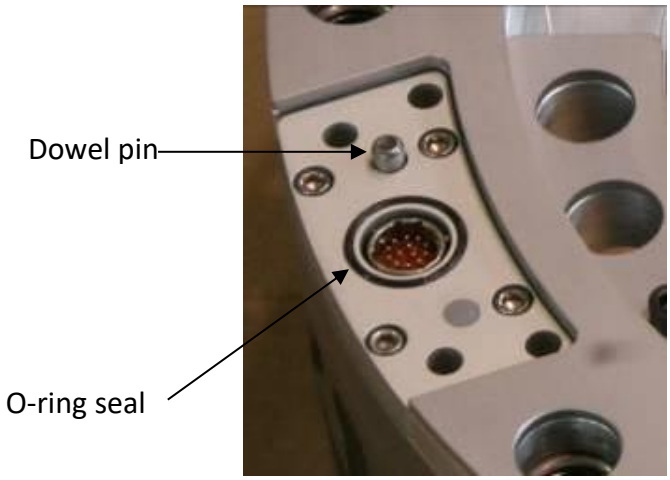


- Secure the amplifier with eight ¼-20 x 1-1/8 inch stainless steel socket-head screws with a small amount of anti-seize on the thread and with provided washers. Tighten ¼”-20 bolts to 5 lb.ft (7 N.m) torque.

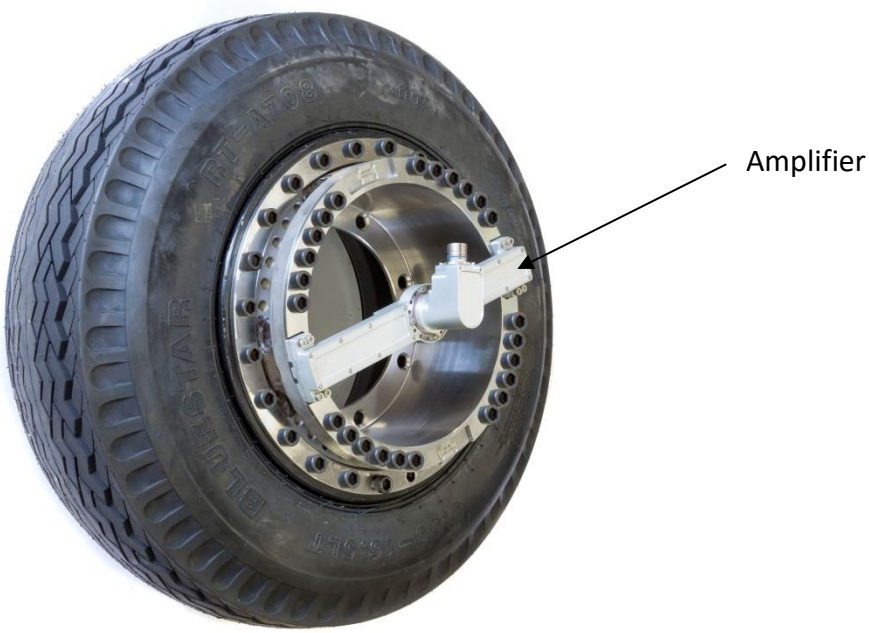


**Amplifier Mounted**

- The slip ring is attached to the amplifier with 8-32 x 3/8-inch screws. Use oil or anti-seize on these fasteners as well. The slip ring has been shipped already installed on the amplifier housing and is normally left attached to the amplifier housing when measurement system is removed from the vehicle.

*Caution!* *When removing the amplifiers, take care to pull off each side evenly. Failure to do this may cause damage to the dowel pin, amplifier housing or bridge connectors.*

## Amplifier Stand-offs

When using a dual wheel installation, amplifier stand-offs are necessary to prevent the Signal Cable from contacting the wheel or tire. The amplifier stand-offs are used to move the amplifier package, including the slip ring, signal cable, and slip ring stator restraint, outboard so that the cable can be routed around the wheel without having to make sharp bends in the cable.

**Set of LW-2T-40K Amplifier Stand-offs**

- O-rings are used to provide weatherproof sealing between the amplifier stand-offs and the transducer. There are also O-rings between the amplifier stand-offs and the amplifier package. Make sure the O-rings are in their proper place before installing the stand-offs and amplifier package.
- Secure the amplifier stand-offs with eight ¼-20 x 1-1/8 inch stainless steel socket-head screws and tighten to 5 lb.ft (7 N.m) torque. Temporary thread locker (e.g. Blue Loctite) is recommended on these fasteners.

- Secure the amplifier to the stand-offs with eight ¼-20 x 1-1/8 inch stainless steel socket-head screws and tighten to 5 lb.ft (7 N.m) torque. Temporary thread locker (e.g. Blue Loctite) is recommended on these fasteners.

- Secure the slip ring, Signal cable, and Stator restraint as described in the Amplifier Installation section above.

## Slip Ring Rotational Restraints

The Slip Ring Stator (non-rotating part of slip ring) is the Position Reference for the Wheel Force Transducer System. The Stator should have minimal movement with respect to the vehicle body through-out the test.

### Stator Restraints for Rear (Non-Steering) Wheels

Michigan Scientific provides a MVSR (Magnetic Vehicle Stator Restraint) and restraint rod with each Wheel Force Transducer System.

The MVSR and restraint rod should be used to prevent the slip ring from rotating on non-steering wheels or straight line tests. The MVSR should be attached to the vehicle body with the magnet backing and should be placed directly above the slip ring. Slide the restraint rod into the 5/8” (16mm) hole in the MVSR and attached the plastic portion of the restraint rod to the Slip Ring with two M4x10mm Phillips head bolts. These bolts should be installed with Loctite and should be tightened firmly with a Screwdriver.

Use a digital protractor or level to check if the slip ring stator is vertical. As needed, make adjustment to the MVSR placement so that the slip ring is vertical. Once the MVSR is in the proper location, tape should be used to further secure the MVSR to the vehicle body. If the car body is non-ferrous, strong tape alone can be used to hold the MVSR in place. If a vertical mounting of the slip ring stator cannot be achieved, the angle of the slip ring stator must be measured and entered into the CT3 webpage, see page 53.

## Stator Restraints for Front (Steering) Wheels

For wheels that will be steered during a test, there are three options for stator restraints. (1) MSC Stator Angle Correction Device (SAC), (2) make a custom over the wheel bracket, or (3) use the post-processing stator angle correction method. One of these methods should be used to prevent an error between X & Z axis while steering.

## Stator Angle Correction Device (SAC)

The SAC is the easiest and most accurate of the three methods. The SAC installs to the vehicle just like the MVSR, however the Stator rod is measured as it changes angle with respect to vertical and the wheel rotational angle is automatically corrected before coordinate transformation, preventing any error when steering. The SAC should be zeroed with the wheels straight and stator rod perpendicular to the ground in 2 planes as shown below. Once positioned properly zero the SAC by pressing and holding the button

on the side for 2 seconds, and waiting until the button light stops flashing. Detailed SAC operation info is provided in the SAC manual.

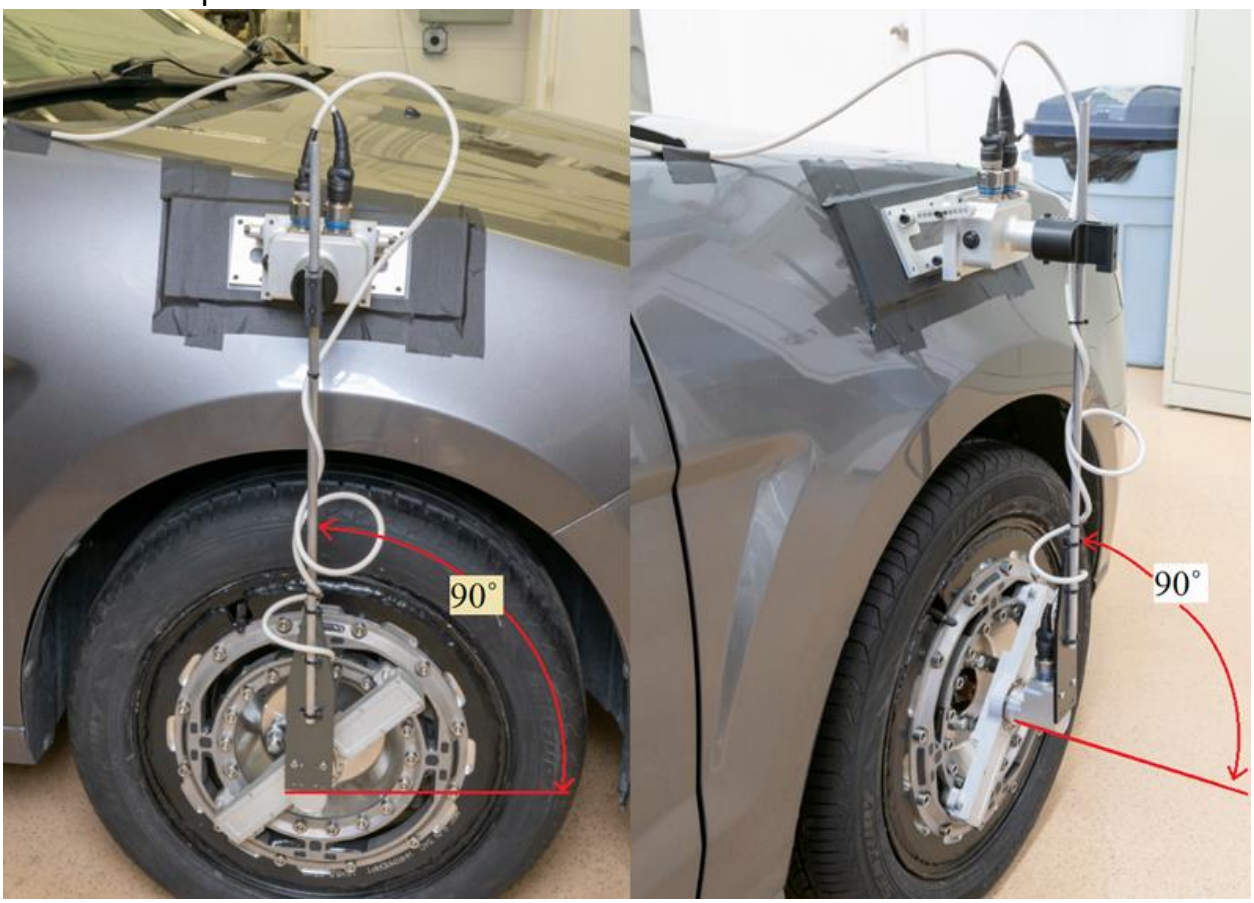


## Over the Wheel Bracket

The over the wheel slip ring stator bracket will have to be custom made by the user. The reason for this is that the attachment points for every vehicle are unique, so there is no universal type over the wheel bracket. The over the wheel bracket should be stiff, yet lightweight. Below are a couple of examples of over the wheel brackets.

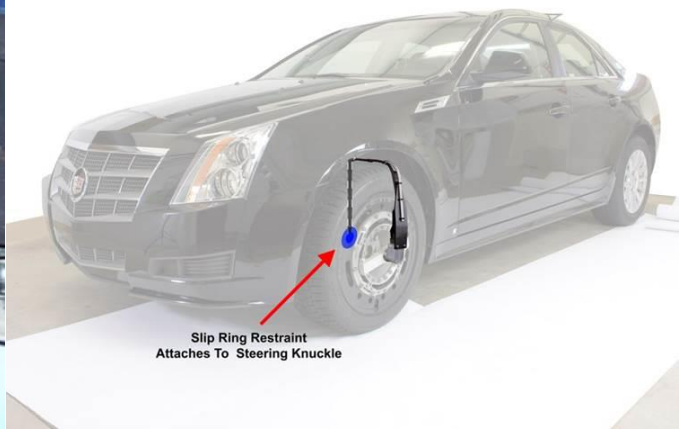

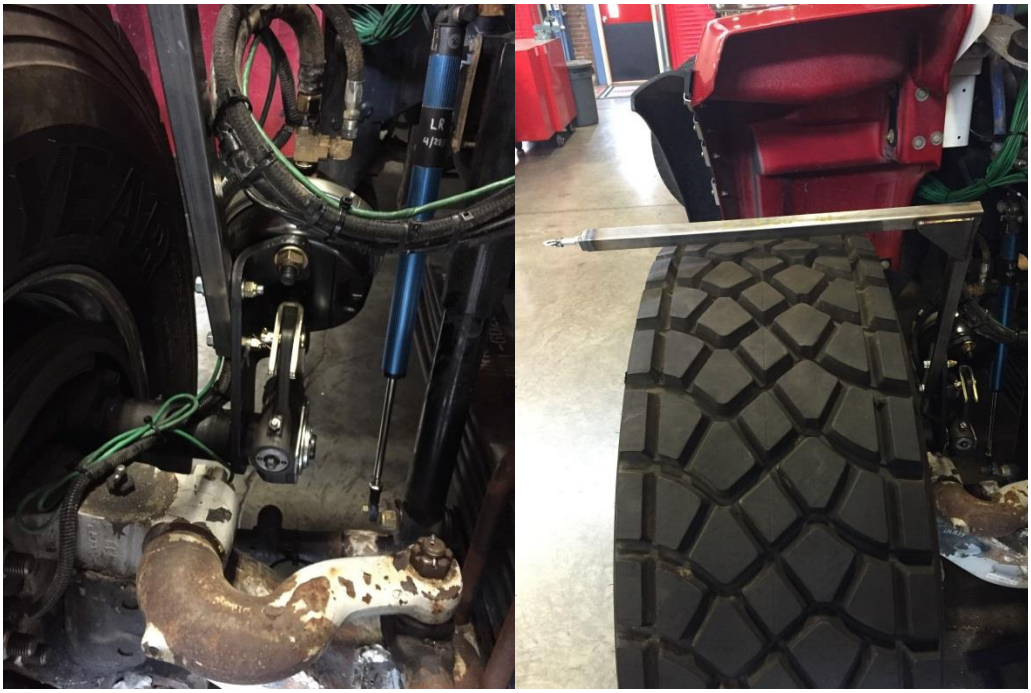

## Post processing Stator Angle Correction Method

In some cases an over the wheel bracket can be difficult or impossible (low wheel well clearance) to make. In this case we suggest using stator angle correction. Stator angle correction requires an additional (not provided) transducer on the vehicle that changes output as the wheels steer. The transducer used most commonly are a steering wheel angle output from the Vehicle CAN Bus or a string potentiometer attached to the tie rod or other steering component.

After the additional transducer is operating, a calibration needs to be performed by the user to establish a relationship between the transducer output and the angle of the slip ring stator as the wheels are steered. Record both transducer output and the slip ring stator angle (measured with digital protractor) 10 different times between right steer lock and left steer lock. The figure below defines positive stator angle for both the right and left sides.

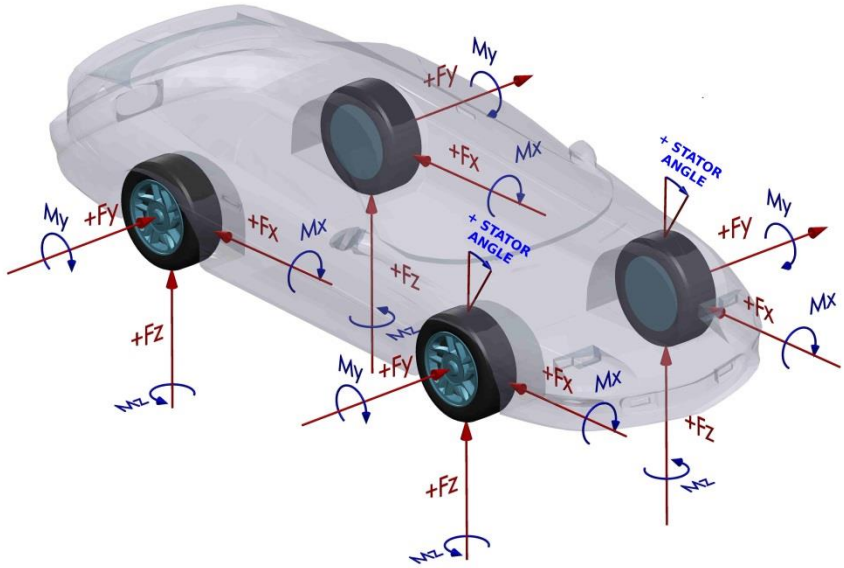


Next take the 10 data points recorded and create a linear regression between the transducer output and stator restraint angle. That will result in the following equation, where m is the slope determined during linear regression and b is the off-set.
Stator Angle = m (transducer output) + b
Next add the following correction equations into your data acquisition as calculated channels, where Fx, Fz, Mx, &Mz are the outputs from the Wheel Force Transducer.
FXcorrected = Fx*cos( stator angle) – Fz*sin(stator angle)

FZcorrected =Fx*sin (stator angle) +Fz*cos(stator angle)

MXcorrected = Mx*cos(stator angle) – Mz*sin(stator angle)

MZcorrected = Mx*sin(stator angle) + Mz*cos(stator angle)

*Caution: Some data acquisition use radians as the measure of angle, therefore the stator angle needs to be converted to radians before it is used with the above equations.*

# Spinning Assembly Cable Connections and Signal Outputs

- Connect one end of the 9 meter (30 ft) long Signal cable to the slip ring. The connector is waterproof. For off-road testing, using tape around this connection keeps grit from getting into the connector threads. The connector is difficult to remove if grit enters the threads.

- Connect the other end of the cable to the CT3 electronics.

- Connect the power cable to the CT3 electronics.

- Connect other end of the power cable to a DC voltage source in the range of 9 to 36 volts. The white wire is for power high. The black wire is for power ground. The power draw from the vehicle is about 6-7 Watts per CT3/WFT system.

## CAN Bus Signal Outputs

- If using CAN Bus signal output, connect one end of the CAN Bus cable to the CT3 and the other end to the data acquisition/controller. If using one CAN Bus for all CT3s, connect the cable to the top CT3 box and select 'All-to-Top' mode in CT3 webpage. If using two CAN buses select '2-to-1' mode in the CT3 webpage and plug a CAN cable into each CT3 set to Left side of vehicle. For example LF CT3 will output signals from LF & RF. If using one CAN bus for each CT3 select 'Direct Output' mode in the CT3 webpage and plug a CAN cable into each CT3. A .dbc file specific to your test can be downloaded from the CT3 webpage.

## Analog Signal Outputs

- If using analog outputs, connect the CT3 Analog Module to the CT3. Then use DB9 connector output cables, to the data acquisition/controller. CT3 Analog outputs are Floating Single-Ended Outputs. The chart below output cable wiring diagram.

| **CT3 Analog Output Module** - Output Cable Pinout | | | 2/15/2023 |
|---|---|---|---|
| **Pin#** | **Function** | **Description** | **Color** |
| 1 | GND | NC | NC |
| 2 | Output 2 | Signal 2 High | White |
| 3 | GND | Signal 2 Low | Brown |
| 4 | Output 4 | Signal 4 High | Yellow |
| 5 | GND | Signal 4 Low | Green |
| 6 | Output 1 | Signal 1 High | Red |
| 7 | GND | Signal 1 Low | Blue |
| 8 | Output 3 | Signal 3 High | Pink |
| 9 | GND | Signal 3 Low | Gray |
| NC = Not Connected | | | |

## CT3 Chassis Ground Connection

- In many Spinning application tests the CT3 will perform without noise issue without connection to chassis ground.

- If there is a potential noise issue or the smart sensor cannot be read or written, connect the CT3 to vehicle chassis ground**. This can be done in one of the two following ways.** Be sure to not create a grounding loop by connection the CT3 and Data Acquisition both to the vehicle chassis.

  **Ground Connections in vehicle (select only one of these)**

  1 Connect one end of the CT3 Grounding Cable to the banana plug in the back of the CT3 and connect the other end of the cable to the vehicle chassis or if Data logger is already connected to the vehicle chassis then connect the grounding cable to the Data logger grounding stud.

  2 Connect the shield of the CT3 power cable to the vehicle chassis or if Data logger is already connected to the vehicle chassis then connect the grounding cable to the Data logger grounding stud.

  **Ground Connections in a lab (select only one of these)**

  1 Connect one end of the CT3 Grounding Cable to the banana plug in the back of the CT3 and connect the other end of the cable to the lab power ground.

  2 Connect the shield of the CT3 power cable to the lab power ground.

## CT3 Power-up

- Turn the power switch on to the CT3 with the Power button on the back of the CT3. At power-up, the CT3 will automatically read the information stored in the smart sensor of the amplifier. This information includes zero values, shunt calibration values, desired full scale outputs, transducer information, and CT3 webpage settings. Since the calibration information is stored in the Amplifier and not the CT3, the CT3s are interchangeable.

- At this time (if CT3 is in Run mode & Vehicle Coordinates), the force, moment, and position channels are held at zero until the CT3 receives an index pulse and the screen will display 'ROTATE WHEEL'.

- Press the mode button to move the CT3s to SET-UP mode, then set the proper POSITION for each CT3, perform SHUNT, ZERO, and ANGLE ZERO. The details of these operations can be found starting on page 40.

# CT3

## Introduction

One CT3 is used for each wheel force transducer. The CT3 is the User Interface. It also performs coordinate transformation, cross-talk correction, zero off-set adjustments, and vehicle position polarity adjustment in real time. The CT3 buttons can initiate a Zero function, a Shunt Calibration function, Zero Angle, and be set for Vehicle position of installed WFT. The CT3 also has an embedded webpage to access additional set-up options, configure CAN Bus output, and create a .dbc file. The front of the CT3 has a display which will tell you the SN of the WFT connected, current User selected settings in the CT3 and any current Faults or Errors in the system.

## Main CT3 Set-up Functions

The main set-up functions that should be done at every new test installation and set-up are Position, Zero, Shunt, and Zero Angle. The position button allows the user to indicate to the CT3 what wheel position the transducer is mounted and this should be done first so all stacked CT3s can communicate. The remaining functions can be done in any order. The Shunt button performs a Shunt calibration and compares it to the factory Shunt calibration. This verifies that the Transducer and Amplfier are working properly. The Zero adjusts the off-set of each WFT channel. This must be done each time the transducer re-bolted to the adapters. The Zero Angle sets the Z reference angle of each WFT. Details of each main set-up function are described further below.

## Important CT3 Website selections

One main set-up function that should be checked in the CT3 Webpage for each Test set-up is the Measurement Origin. The default Measurement Origin is the center of the

transducer. See page 54, to change the WFT Measurement Origin. You should also verify that the Coordinate system set in the CT3 webpage matches your desired Measurement Origin. The current Measurement Origin setting can be seen on the Display. If being used in a Non-spinning application, you should check the 'For Simulator Use' Box on the CT3 webpage.

# CT3 Basics

## Lights and Controls

All controls located on top of the enclosure are momentary contact switches. They correspond to the labels located on the front panel. Power button is located on the rear panel and position/screen advance control is located on the front panel.

## Powering Up

*Note: It is good practice to first connect all cables to the CT3 electronics before powering it up. If this is not done, possible damage may occur. In addition, the CT3 reads important transducer information, from the smart sensor in the amplifier package, at startup. If the smart sensor is not read on power-up, the FAULT light will be lit.*

The power switch turns the power on and off. When the CT3 is turned on, it defaults to Run Mode. This will be indicated by green light on the front panel. Transducer offsets, sensitivities and other information is read from the smart sensor during power up.

## Display

The CT3 has a display on the Front. The display will always show the user which Serial Number WFT it is connected and which Wheel Position is selected. In RUN mode, pressing the POSITION/ADVANCE button will jog through various CT3 User selected option, for easy viewing without connecting to the CT3 webpage. To change any of these setting, the user must connect to the CT3 webpage.
If there are any FAULTs or ERROR codes, these will be displayed on the Display as well.

## Position

The position button allows the user to indicate to the CT3 what wheel position the transducer is mounted. Different coordinate transformation equations are used on the right vs. the left side of the vehicle. This information is also used by the CT3 electronics to indicate in the CAN DBC file the identification of data being transmitted. In addition this allows the user to keep track of which electronics is attached to which wheel.

When stacked with one or more other CT3 units, the position information is shared between the CT3 electronics. If two or more CT3 electronics are assigned to the same wheel location, 'DUPLICATE POS' message will be displayed on the display.

## Zero

The Zero light indicates that the module is performing a zeroing sequence, invoked by the Zero button on top of the enclosure. This button is only active during the Setup Mode. The light is also used to indicate an error in the zeroing sequence when used in conjunction with the Fault light. If an error occurs during the Zero process 'ZERO ERROR' will be indicated on the display. The zeroing sequence records data and calculates an offset value. This offset is recorded into the smart sensor located in the amplifier package so it is not lost when power is interrupted or a different CT3 is used. When set to Spinning Mode, the CT3 uses 2 or 8 revolutions of the tire to calculate the offset. If the wheel is not turning when the Zero button is pressed, the calculation will be based off of the next 2 revolutions. If the CT3 senses that the wheel is turning above 15 rpm, it uses 8 revolutions to get a better on-road-averaged value. (The is referred to as rolling zero). When set to Non-Spinning Mode, the CT3 nulls all channels.

## Zero Angle

To initiate a Zero Angle, ensure the CT3 is in Set-up mode with the wheels off of the ground and able to rotate freely. **If CT3s are stacked, pressing the Zero Angle button will initiate the Zero Angle function for only the top box. To Zero Angle lower boxes, hold the 'Position/Advance' of the desired CT3, then press the Zero Angle button on the top box.**

Press the Zero Angle button, rotate the wheel until the Zero Angle light starts to flash. Then point the Z+ arrow on the transducer or amplifier vertically towards the ground and press the Zero Angle button a second time. If the wheel has already been rotated while the CT3 has been powered on, then the Zero Angle light will flash immediately upon pressing the button the first time. A level or digital protractor should be used across the bolts of the WFT to ensure that the Z+ arrow is completely vertical before pressing the Zero Angle button the second time.

Note: If a Zero Angle function is not performed, the CT3 will use the default slip ring encoder index angle as the Z reference angle. This was the method used in CT2.

## Shunt

The *Shunt* light is used to indicate shunt related features. The button located on top of the enclosure can be used to invoke a shunt sequence. The shunt sequence performs a Shunt calibration and compares these field Shunt values to the factory Shunt values.

After a successful shunt sequence, the Shunt light turns off and updates the smart sensor. If the field Shunt value and Factory Shunt value differ by more than 2.5%, the fault and Shunt light stay lit and 'SHUNT ERROR' will be indicated on the display. This often indicates an issue with the transducer or amplifier.

## Mode

The Mode lights indicate whether the module is in Setup or Run Mode. The Mode button on top of the enclosure toggles between the modes. Run mode is used whenever data is being collected. Setup mode is only used for Set-up and Troubleshooting. Zero, Shunt, Zero Angle, and Position features cannot be accessed unless the CT3 has been switched to Setup mode. In set-up mode, coordinate transformation and zero off-set adjustment are not performed.

## Fault

The fault light indicates that there is a problem with the module. It can be lit in conjunction with other lights or by itself. The corresponding fault message will be indicated on the display.

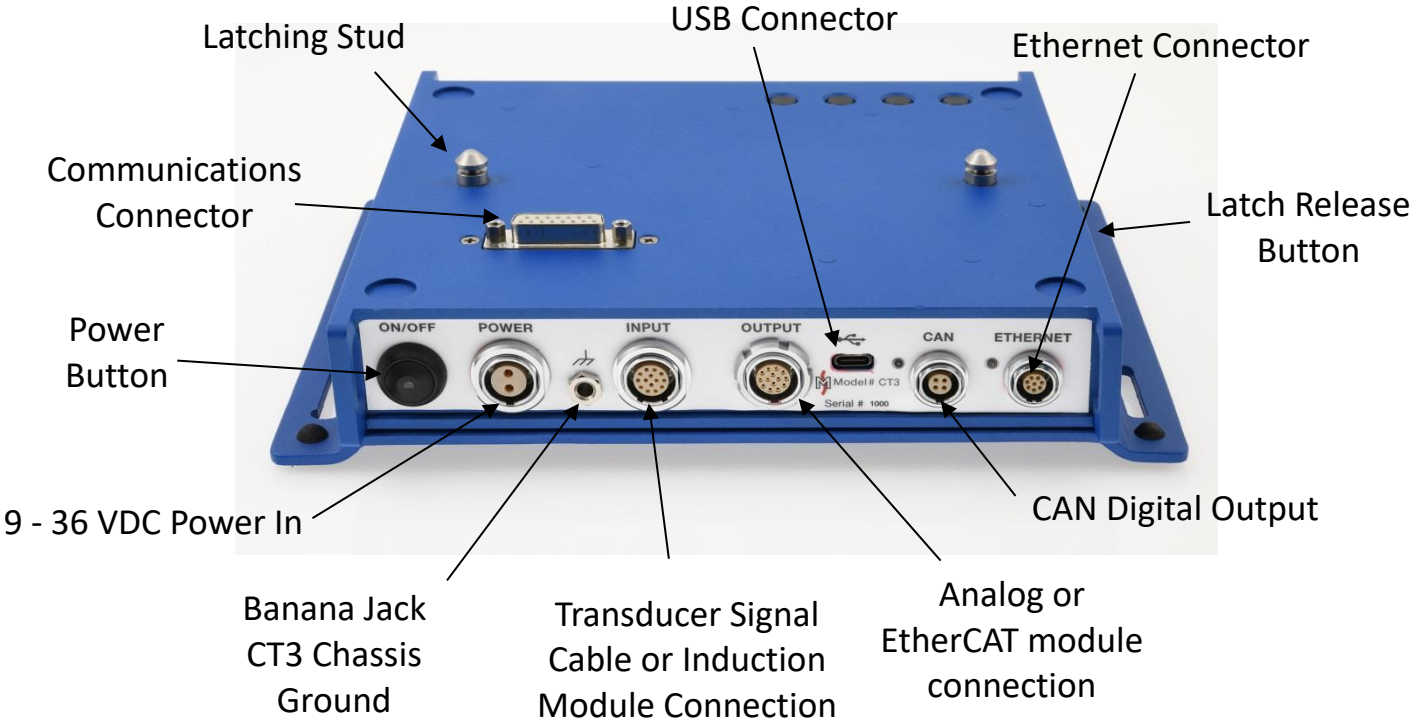


## Connectors

Connectors located on the back panel of the CT3 are for power, ground, Transducer signal cable/Induction Module, Analog output module/EtherCAT output module, USB connection to webpage, Ethernet connection, and CAN digital Signal output. The D-sub

connectors located on top and bottom of the enclosure are used for communications between multiple CT3 electronics.

## Multiple CT3s

Each CT3 is used with one Wheel Force Transducer. When using multiple Wheel Force Transducers systems, the CT3 is designed to be stacked. Latch studs are mounted on top of the enclosure and a latching mechanism is mounted on the bottom. When the boxes are set on top of each other, they latch together. A button on each side of enclosure releases the latches. Electrical connections are made via the D-sub connectors mounted on top and bottom of the enclosure. When not stacked it is recommended that the dust covers provided with the enclosure be used to cover the D-sub connectors. This will protect the connectors and reduce the chance of electrical damage to the electronics.

The CT3 electronics communicate with each other using a digital bus interface. This allows the operator to control all of the CT3s with one set of controls. Notice that the control buttons are located on top of the enclosure. When one CT3 is stacked on top of another, the buttons on the lower one are covered. All functions are controlled by the top CT3 at this time.

A base is available to provide better stability and tie down locations. This base also protects the D-sub connector on the bottom CT3.

The power supply cable can be connected to any one of the CT3 electronics. That CT3 will supply power to the rest in the stack, therefore only one power cable is required.

Each CT3 retains its own power switch and must be turned on individually. At power up, the CT3 checks the state of the other boxes and then sets itself to match.

Up to four CT3 electronics can be stacked together. If you want to stack more together, please contact Michigan Scientific to discuss your specific application.

### Power Requirements

The CT3 requires 9 to 36 VDC power. Power draw is 6-7 watts for each WFT system.

One power cable will power a stack of CT3s (up to 4)

### Individual CT3 Shunt or Zero

If you have a stack of CT3s, pressing the SHUNT button on the top CT3 perform a SHUNT for all CT3 boxes in the stack. If you only want to perform the SHUNT for one WFT, then hold in the Position/Advance button, then press the SHUNT button on the top box.

If you have a stack of CT3s, pressing the top ZERO button if perform a ZERO for all boxes in the stack. If you only want to perform the ZERO for one WFT, then hold in the Position/Advance button, then press the ZERO button on the top box.

## Signal Outputs

Eleven signal outputs are available from each CT3. The channels are for force and moments about the x, y, and z axes, and also Wheel Speed, Wheel position, Acceleration X, Acceleration Y, and Acceleration Z. In the CT3 webpage you have the option to replace Wheel Speed and Wheel Position with Sine and Cosine Outputs.

### Using CAN Signal Outputs

The CT3s send high speed data through their internal connection allowing the CAN data to all be output from the top CT3, if desired. There are three user selectable CAN output option, 'All-to-Top', '2-to-1', and 'Direct Output'. With 'All-to-Top' selected all the data from the stacked CT3s will be output on a single Bus from the Top CT3 CAN connector. With '2-to-1' selected the data from a single axle will be output to the Left side CT3. For example LF CT3 will output signals from LF & RF.
With 'Direct Output' Selected the data from each WFT will be output on their own CT3 CAN port. For example with 4 CT3s stacked, you will have 4 CAN Buses to connect to the data logger.
CAN cables can be built with either a DB9 or Turk connectors (for eDAQ).
See more about this is in CT3 CAN Bus configuration section, on page 58.

A .dbc file can be created and downloaded from the CT3 webpage. Once the .dbc file is loaded into the data acquisition, and the systems are connected, all the channels will be properly labeled (according to Wheel Position) and scaled (in engineering units). The drawback of using CAN signal outputs is the signal delay which is dependent on output rate. It is 2 milliseconds for 2000/2048 Hz, 4 milliseconds for 1000/1024 Hz, and 7.5 milliseconds for 500/512 Hz.

### Using Analog Signal Outputs

An Optional Analog Output Module and output cables can be purchased. The default voltage for the Analog output is +- 10 VDC. This voltage can then be converted to their engineering units by multiplying by the sensitivity listed on the Quick Reference Calibration Sheet supplied with the WFT. Also see Appendix 2 on page 74

All the analog outputs are single ended and isolated from power ground. See diagram in appendix 1. The CT3 webpage allows the user to replace Wheel Speed and Wheel Position with Sine and Cosine, if desired.

The time delay when using Analog Signal Outputs in 0.5 milliseconds.

## Shunt Calibration Sequence

**Shunt Sequence** - The CT3 calculates an internal fine digital gain, used to make output sensitivities match the values programmed into the Smart sensor.

To invoke a shunt sequence.

- Press the *Mode* Button to enter *Setup Mode*
- Press and release the Shunt button.
- The Shunt light will illuminate to indicate a shunt sequence is in progress. Once the Shunt light goes out (about 9 seconds), the shunt sequence is complete.
- Press the *Mode* button to return to *Run Mode*.

If the Shunt light does not go out and the Fault light illuminates, the shunt sequence did not pass. If this happens the display would indicate 'SHUNT ERROR'. The shunt sequence commands the amplifier package to invoke a shunt calibration resistor at each strain gage bridge in the transducer. The CT3 reads the voltage change, caused by the shunt, and adjusts the gain of each channel to match the sensitivity programmed into the *smart sensor*. This calculated gain is recorded into the smart sensor located in the amplifier package so this information is not lost when power is interrupted or a different CT3 is used. If the calculated gain is more than 2.5% different than what is programmed into

the smart sensor, the Fault light will come on indicating a likely problem with the transducer or amplifier.

*Note: This sequence can be performed at any time (on the ground or hoisted.) Just be sure not to change load on the WFTs during the Shunt sequence.*

**Shunt Hold** - The CT3 can be commanded to invoke and hold shunt calibration. This can be used to write down the transducer off-sets and shunt voltages.

To invoke the shunt hold:

- Press the *Mode* Button to enter *Setup Mode*
- Press and hold the *Shunt* button until the shunt light starts flashing (approximately 1 second).
- The *Shunt* light will flash and the outputs will hold a positive shunt until the shunt button is pressed again.
- Then the system outputs will hold a negative shunt calibration until the shunt button is pressed again.

The Quick Reference calibration sheet lists sensitivity and Delta Shunt values in lbf/lb.ft and N/N.m. If desired, the user may check the sensitivity by recording the outputs during a shunt sequence and calculating the delta Shunt value (magnitude of change from positive shunt to negative shunt, divided by two).

# Spinning Use System Set-up

The CT3 has a Zero feature that automates the zeroing process. With any zeroing method used below, **it is recommended that the transducers be exercised before any zeroing is done. To exercise the transducers, perform a figure 8 maneuver, and two or more hard brake stops.**

There are two zeroing procedures for Spinning Applications.

## Zeroing on the Hoist

This Zeroing method uses the weight of the wheel and tire to determine the zero offsets. This method is recommended for best accuracy.

*Caution:* *While it does not matter which direction you turn the wheel during the zero sequence, changing the direction of rotation during the zero procedure will cause errors. Remember when turning one wheel on a drive axle, the one on the other side will turn the opposite direction. This is OK as long as the wheel does not change direction of rotation during the sequence.*

- Turn on the CT3.
- Lift the tires clear of the ground.
- Press the *Setup Mode* button.
    - The blue Setup Mode light will illuminate.
- Press the *Zero* button. Note: The wheel must not be rotating when the *Zero* button is pressed.
    - The *Zero* light will illuminate.

*Caution:* *While it is not important that the wheel be turned at a steady rate, do not impart excessive acceleration or deceleration to the wheel while turning it. This may cause calculation errors. To reduce errors, the CT3 uses position-based sampling for this procedure.*

- Rotate the transducer. When rotating the transducer, never apply force to the tire itself. This can cause an error in the zero calculations. Always apply force to the amplifier package only. Rotate in one direction until the amber *Zero* light goes out, this should take 2 revolutions.

Using more than one transducer with stacked CT3s

- You may rotate each transducer independently.
- To zero only one wheel, you will need to turn off the CT3 electronics, on the wheels that you do not want to zero, or un-stack them.

When the CT3 completes the zero procedure, it will write the calculated offset value to the smart sensor located in the amplifier. This way the transducer does not need to be zeroed every time the power is interrupted or if a different CT3 is used with the transducer.

## Rolling Zero on the Road

This Zero method occurs when the wheel speed is above 15 rpm, and uses the weight of the vehicle to determine the zero offsets. The Fy (Lateral) transducer channel may have real, non-zero values during this mode of operation due to toe-in and tire conicity. The My (Torque) may also have a real non-zero value due to drive line torque and brake or seal drag. Use rolling zero only when lower accuracy can be tolerated.

- Press the *Setup Mode* button.
- The blue *Setup Mode* light will illuminate.

- Coast the vehicle along a smooth and level section of road or parking lot.
- Press the *Zero* button.
- The amber *Zero* light will illuminate.
- The CT3 detects that the tires are turning and will use the average of the next 8 revolutions to compute the offset.
- Once the procedure is complete, the light will go out.
- When the CT3 completes the zero procedure, it will write the calculated offset value to the memory chip located in the amplifier. This way the transducer does not need to be zeroed every time the power is interrupted or if a different CT3 is used with the transducer.

### Verifying the Zero Procedure

To check the quality of the zero, set the CT3 to *Run* mode and *Vehicle* coordinates. Observe the output from each channel with the wheel lifted off of the ground. The x and y-axes forces should have very little output. While hoisted the Fz force should read the negative weight of the wheel and tire. The My and Mz moments should have little output. The Mx moment should have some output proportional to the weight of the wheel and tire multiplied by the moment arm from the wheel centerline to the transducer centerline. (if the measurement origin is at the default, transducer centerline.)

Spin the wheel and observe the x and z-axes force outputs. There should be very little ripple in the outputs.

## Non-Spinning Use – System Set-up

- Operate CT3 in Non-Spinning mode which can be selected in the CT3 webpage. Fz+ axis should be pointing vertically towards the ground. (If Fz+ axis is not mounted vertically towards the ground, see page 55) Also make sure the 'For Simulator Use' Box is checked in the CT3 webpage, see page 55. A Simulator Cable should be used.
- A Zero in Wheel Coordinates will null out all the channels (zeroing out the static weight of the vehicle), so there are three options to account for the static weight of the vehicle so that the road loads recorded properly match the loads measured on the simulator. They are:

1. Zero the WFTs after they have been bolted to adapters but before the vehicle has been attached to the hub adapters.

2. Zero the WFTs once car has been attached to the WFTs and simulator. Then add the static weight of the vehicle to WFT data through a calculated channel. The road data would not have to be modified.

3. Remove static vehicle weight from previously recorded road data. Then zero the WFTs once car has been attached to the WFTs and simulator.

- Analog signal outputs are commonly used, because the time delay on the these signal outputs is only 0.5 milliseconds.
- CAN signal outputs can also be used. They require CAN input on the Simulator controller. If using CAN signal outputs, signal delay must be compensated for in the Simulator software.

## Stationary Zero

This Zero method is only used in non-spinning applications, such as a simulator. It allows the user to null the output from the transducer.

- Make sure the CT3 is in Wheel the Coordinates.
- Press the *Setup Mode* button.
- The blue *Setup Mode* light will illuminate.
- Press the *Zero* button.
- The amber *Zero* light will illuminate.
- Once the procedure is complete, the light will go out.
- When the CT3 completes the zero procedure, it will write the calculated offset value to the smart sensor located in the amplifier. This way the transducer does not need to be zeroed every time the power is interrupted or if a different CT3 is used with the transducer.

Once the initial setup is accomplished, data collection can continue for several days without readjustment. The vehicle should be lifted occasionally to verify the zero stability.

## Web Page Selectable Options

The CT3 contains an embedded web page that can be used to change system settings or select features. This web page is available to any device with an Ethernet port and web browser.

To access the web page use a USB-C cable.

- Plug the USB C connector of the provided cable into the top CT3 and connect the USB A connector into the laptop.
- Open a web browser and type CT3.local and click enter.
- The web page, shown on the following page, will appear in the web browser

*Note: To make system changes, all CT3s must be connected to their respective wheel force transducer and powered up.*

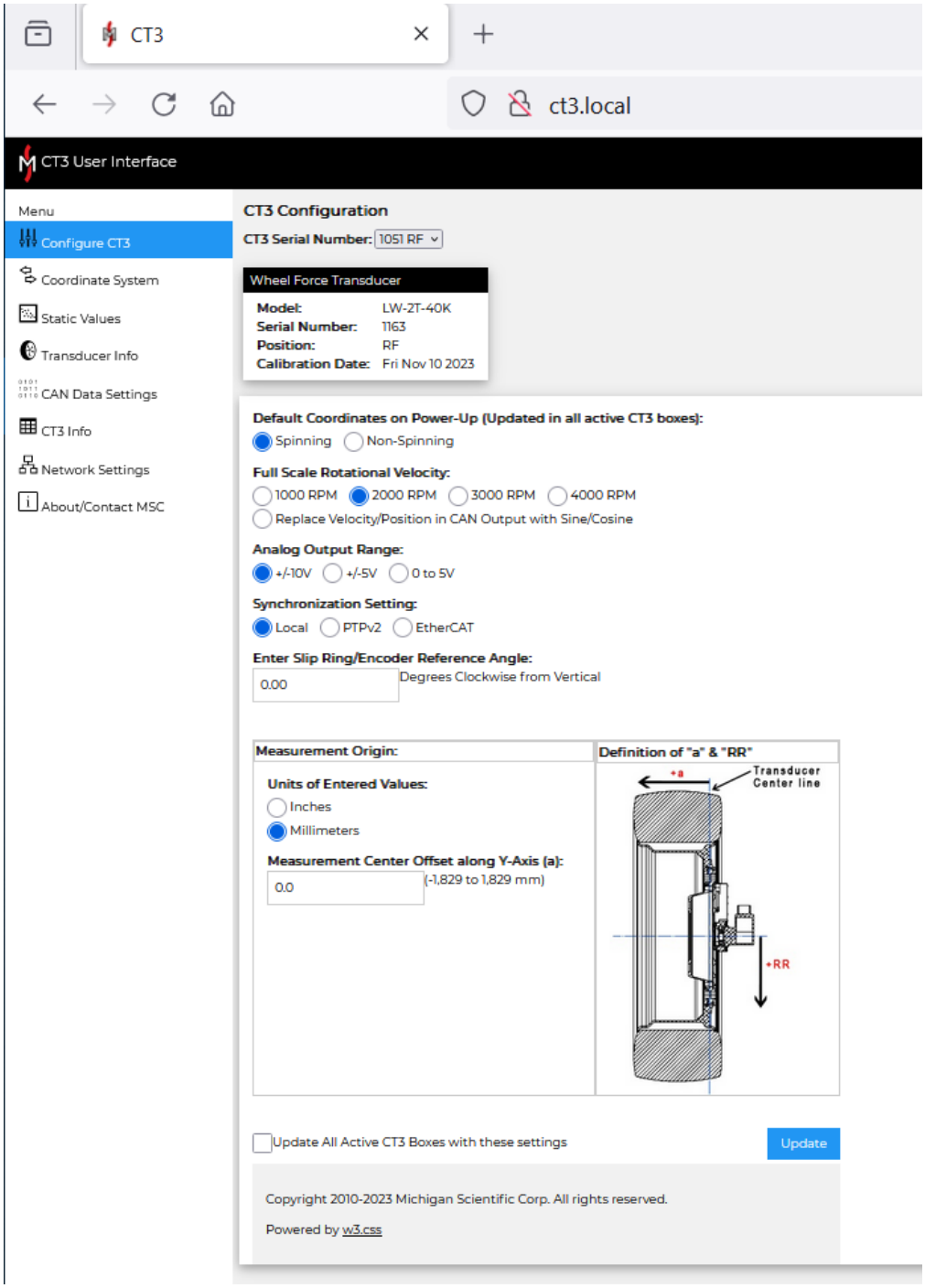


## CT3 Serial Number/Wheel Position

Near the top of the page is a drop down box allowing the user to select CT3 serial numbers paired with the selected Wheel Position for that CT3, shown below.

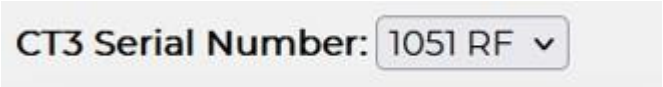


The CT3 that the USB cable is connected to, will check for the presence other CT3 Boxes. These other units need to be stacked together and all units need to be turned on. If other units are present, and turned on, the serial numbers of these units with the

selected Wheel Position will appear in the pull down menu. Selecting a different serial number allows the user to set up each CT3 separately.

If settings for all the CT3 units are to be the same, the "Update All Active CT3 Boxes with these Settings" button can to be pressed before the "Update" button is pressed. Updating all units at once avoids the need for the user to go through the settings for each serial number individually if settings for all units are to be the same.
The Wheel Force Transducer Information shown below CT3 serial number is information for the WFT that is connected to the selected serial number.

## Default Coordinates on Power-Up

Here the user can select whether the CT3 powers up in Wheel or Vehicle Coordinates. If the WFTs will mostly be used in Spinning Applications, select Vehicle. If the WFTs will mostly be used in Non-Spinning Applications select Wheel.

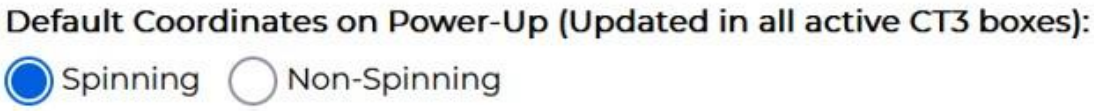


*Note: All CT3 electronics, shown in the serial number drop down menu when this setting is changed, will take the new setting even if the "Update All Active CT3 Boxes with these Settings" button is not checked.*

## Full Scale Velocity

This setting is used to set the full scale velocity of the wheel speed signal derived from the encoder. There are three optional full scale velocities. The full scale velocities are 1,000, 2,000, 3,000, and 4,000 rpm full scale. The default setting is 2,000 rpm full. The user may also select to replace the position and velocity signals with Sine and Cosine signals.

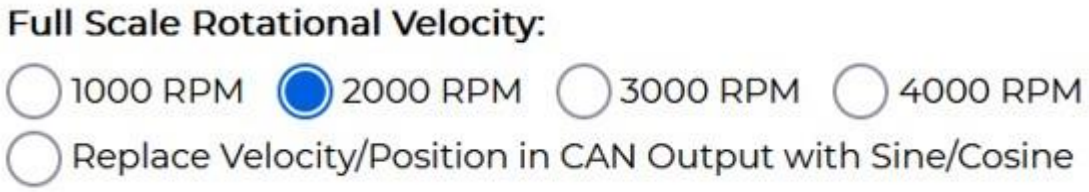

## Analog Output Sensitivities Options.

The default Analog output range is ±10V . The CT3 allows the user to choose analog output ranges of ±10V, ±5V, and 0-5V. Because of that, the number shown in the chart below is the full scale value for each channel. This number needs to be divided by the full scale voltage to calculate the sensitivity in units/volt. Example - If the full scale analog outputs are set to ±10 Volt, the X Force sensitivity will be 18,000 N/V (180,000 N /10 volts). If the analog outputs are set to 0-5 Volt, X Force the sensitivity will be 72,000 N/Volt with a 2.5 volt offset.

NOTE: When Using Analog signal outputs, it is recommended to perform a Shunt Calibration and compare the Delta Shunt through the data acquisition to the Shunt value listed on the Quick Reference Calibration sheet, to ensure proper scaling.

| Output Channel Full Scales | | |
|---|---|---|
| X Force | 180,000N | 40,047 lb |
| Y Force | 90,000N | 20,230 lb |
| Z Force | 180,000N | 40,047 lb |
| X Moment | 45,000 N-m | 33,190 lb-ft |
| Y Moment | 45,000 N-m | 33,190 lb-ft |
| Z Moment | 45,000 N-m | 33,190 lb-ft |
| Velocity | 2000 rpm (default) | |
| Position | 0 - 360 deg | |
| Accel X, Y, Z | ± 100g | |

## Changing Analog Output Range

To change the Analog Output range, select the desired Analog output range, Check the Update All box, and click Update on the bottom of the page.

## Synchronization Settings:

The stack of CT3s can synchronize in three ways, Locally, through PTPv2, or through EtherCAT. The default setting is local which synchronizes all stacked CT3s to each other.

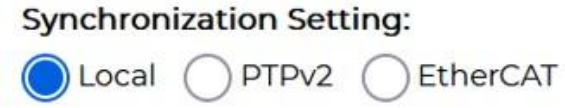


## Slip Ring/Encoder Reference Angle

In some situations, the slip ring body cannot be oriented with the cable exiting the top. The slip ring stator is encoder angle reference for the coordinate transformation

calculations. If the slip ring cannot be mounted vertically, measure the angle that the slip ring body is from vertical in the clockwise direction. Enter that number into the box shown below. The CT3 uses this information to correct the reference angle when performing the coordinate transformation.

If the ZERO Angle function has been performed, the resulting angle value found from this process will be displayed.

## Measurement Origin

The default measurement origin of the LW-2T-40K is the center of rotation and a plane that runs through the center of the transducer beams. The distance to the measurement origin plane to from the inboard edge is 2.000” (50.8 mm). The distance to the measurement origin plane to from the outboard edge is 1.500” (38.1 mm).

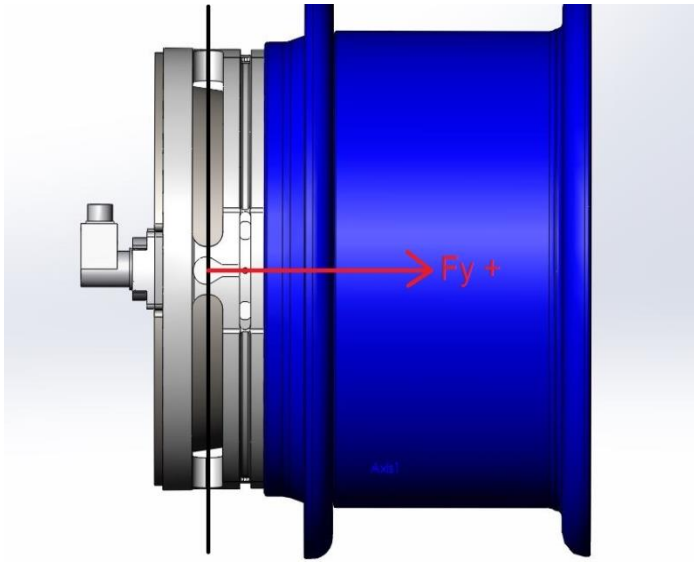


To move the measurement origin to the hub face or tire center, input the “a” value in the CT3 webpage. The value of “a” is provided on adapter assembly drawing if MSC made your adapters. Value “a” can also be measured.
If the user wants to move the measurement origin to the tire patch surface, this input box can be accessed by clicking the “RR” over the diagram. Then a “RR” text box will become available for entering a value. Entering an “RR” value is not recommended because the rolling radius can change dynamically as the tire deflects.

To use this option:

- Check the button labeled “User Defined with Respect to Center of WFT”

- Select “Inches” or “Millimeters” to indicate which units will be used.
- Enter an “a” value if moving the origin along the y-axis.
- Click update at the bottom of the page.

  The image below indicates “a” and “RR” values.

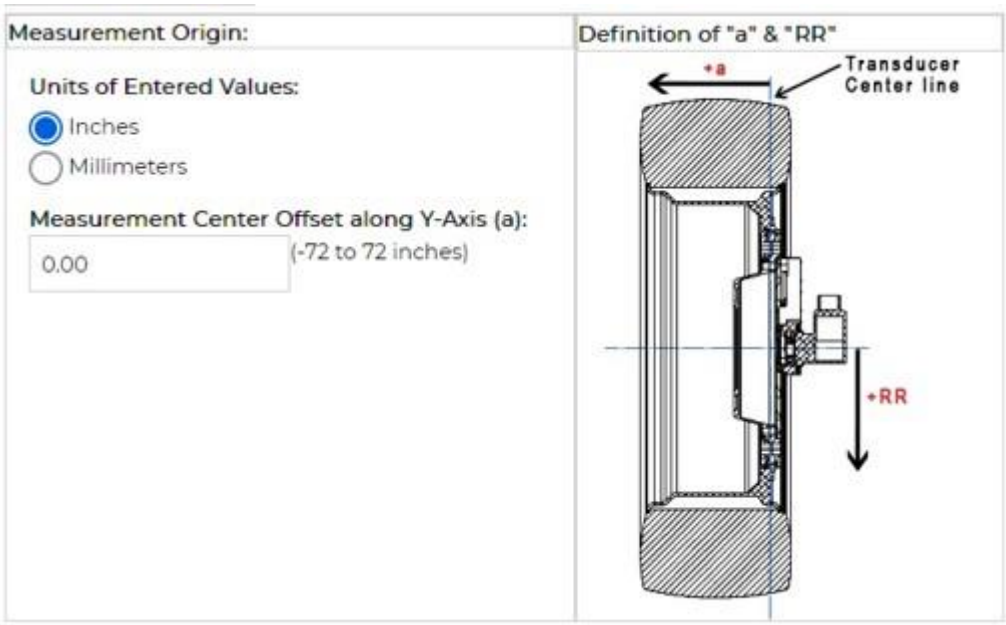


*Note: Only the Mx and Mz channels are affected by these calculations.*

## Non-Spinning Applications

In the CT3 webpage, only when Non-Spinning Coordinates has been selected, the “For Simulator Use Only” box will appear. If the transducer is mounted with the Z+ arrow pointing vertically towards the ground, leave this box at 0.00. If the transducer is not mounted with the Z+ arrow pointing vertically towards the ground, measure the degrees clockwise from Vertical of the Z+ axis, then enter it into the box and click Update.

## Changing WFT Coordinate System

The default WFT coordinate system is the Right Hand Coordinate System shown below. In the Coordinate System tab on the CT3 webpage the WFT coordinate system can be switched to a Left Hand Coordinate System by checking the button labeled “Left Hand” then clicking update at the bottom of the page. This will update all CT3 boxes stacked and powered up. The WFT Coordinate System in explained further on page 64.

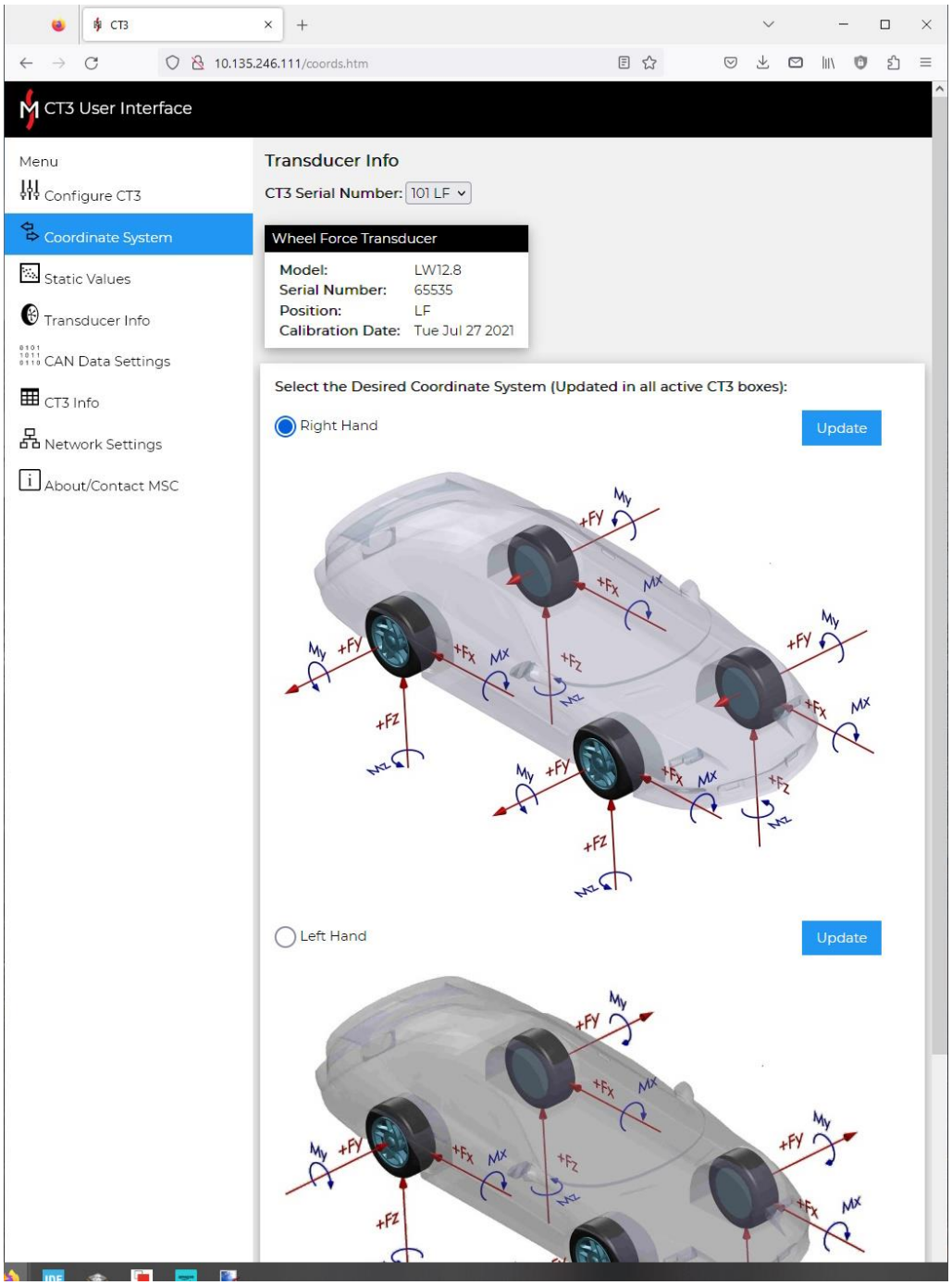

## Static Values

The Web page can be used to view static transducer output values during setup. Select "Static Values" on the upper left side of the web page. The web page displays the static values for all active WFT systems, shown below.

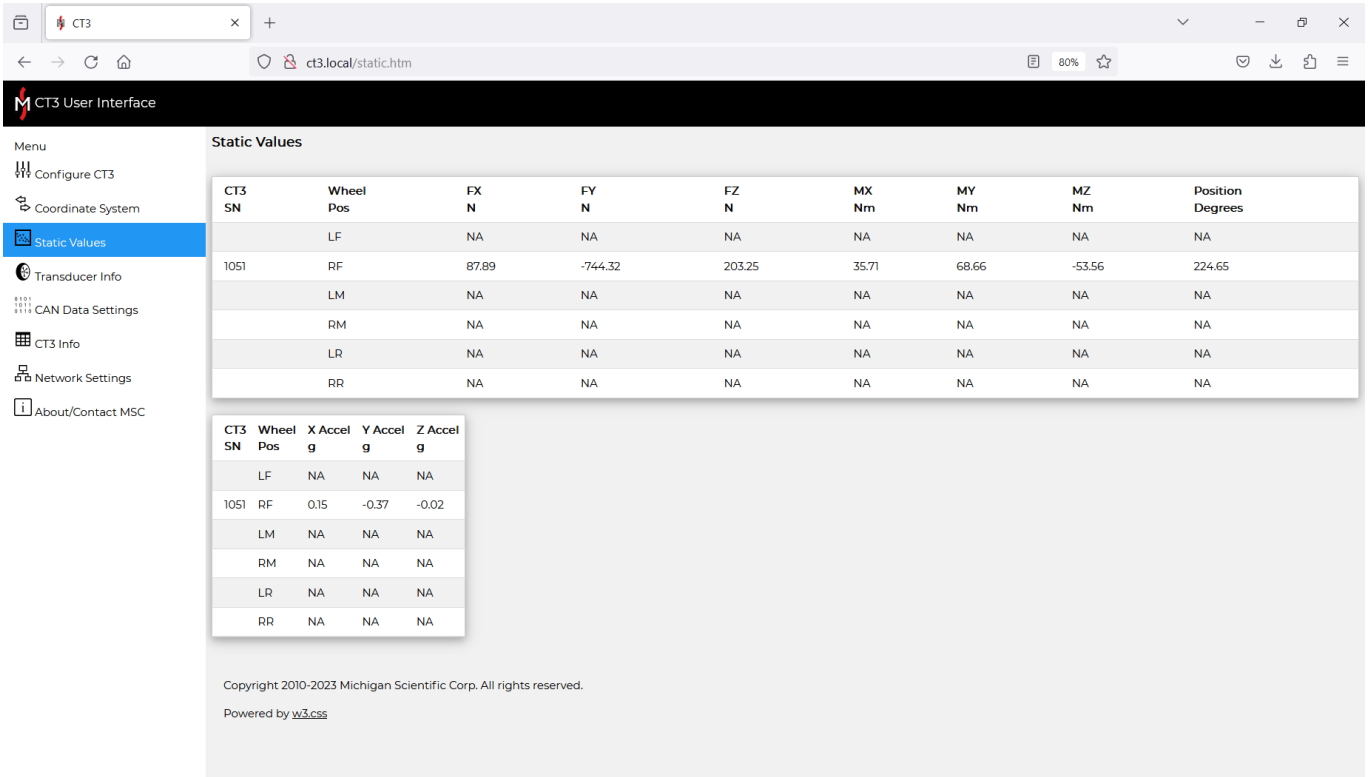


| CT3 SN | Wheel Pos | FX N | FY N | FZ N | MX Nm | MY Nm | MZ Nm | Position Degrees |
|---|---|---|---|---|---|---|---|---|
| | LF | NA | NA | NA | NA | NA | NA | NA |
| 1051 | RF | 87.89 | -744.32 | 203.25 | 35.71 | 68.66 | -53.56 | 224.65 |
| | LM | NA | NA | NA | NA | NA | NA | NA |
| | RM | NA | NA | NA | NA | NA | NA | NA |
| | LR | NA | NA | NA | NA | NA | NA | NA |
| | RR | NA | NA | NA | NA | NA | NA | NA |

| CT3 SN | Wheel Pos | X Accel g | Y Accel g | Z Accel g |
|---|---|---|---|---|
| | LF | NA | NA | NA |
| 1051 | RF | 0.15 | -0.37 | -0.02 |
| | LM | NA | NA | NA |
| | RM | NA | NA | NA |
| | LR | NA | NA | NA |
| | RR | NA | NA | NA |

Refresh rates for the Static Values is once per second.

## Transducer Information

Information for each WFT system can be viewed by clicking on "Transducer Info". The CT3 Serial number/Wheel Position drop down menu allows the user to select which system the information is for.

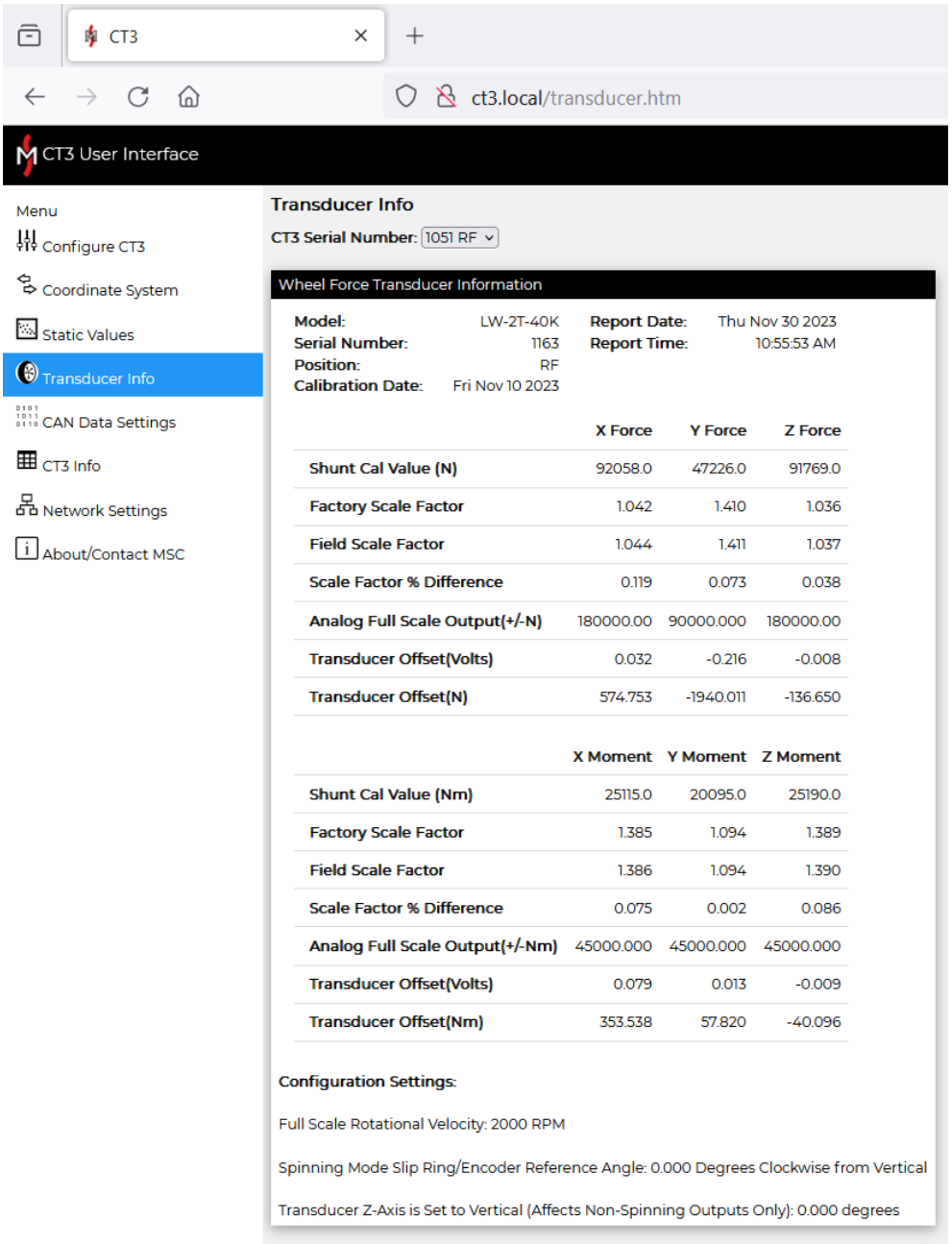


## CT3 CAN Bus Configuration

CAN bus data output settings are configured using the “CT3 Data Settings” tab located on the left side of the web page. Here the CAN type (2.0 or CAN-FD), Output Sample Rate, CAN output mode (Direct, All-to-Top, or 2-to-1) and Desired Units are selected. After making any changes click update and these setting will update for all CT3 boxes that are stacked together.

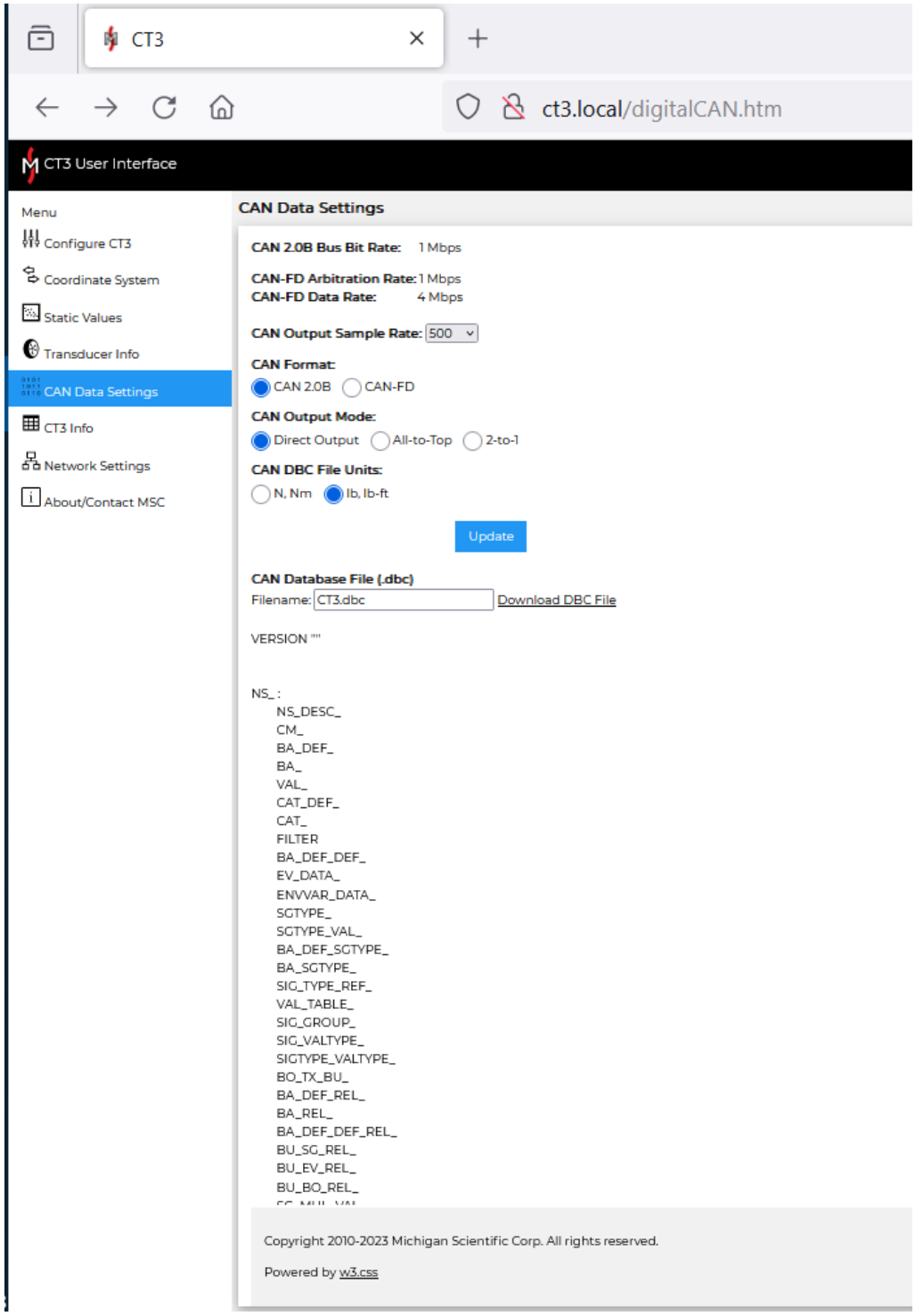


The Baud Rate of the Data logger must be set to 1 mbps for CAN 2.0. This is the amount of data that can be transferred on a standard CAN Bus.

*Note: It is necessary that the CT3 box receive a CAN acknowledge bit from the connected data acquisition system. Do not use passive (listen-only) mode on your data acquisition.*

### Maximum Output/Sample Rates with CAN 2.0

The following sampling rate limitations apply to CAN 2.0.

If connecting 4 WFTs to one CAN bus (All-to-Top) the max output rate is 512 Hz.

If connecting 2 WFTs to one CAN bus (using 2-to-1 for 4 WFTs or using 'All-to-Top' with two WFT connected) the max output rate is 1024 Hz.

If connecting 1 WFTs to one CAN bus (Direct Output) the max output rate is 2048 Hz.

### Delay

There is signal delay caused by filtering performed by the CT3 to decimate the data down to the selected output rate.

The delay is 2 milliseconds for 2000/2048 Hz, 4 milliseconds for 1000/1024 Hz, and 7.5 milliseconds for 500/512 Hz.

### Unit Selection

Select the desired output units. Either lbs/lb.ft or N/N.m can be selected.

There are 3 CAN messages output per sample for each CT3 box

### CAN Bus Termination

A 120 Ohm CAN termination resistor is automatically turned on in the CT3s. The CAN Bus termination should also be turned on in the Data Acquisition.

## DBC file creation

A CAN database (.dbc) file is needed by the data acquisition to de-code the digital data sent by the CT3. A .dbc file is created by the CT3, by clicking the 'Download DBC File' button. A window should pop-up enabling you to save the file to your computer. If browser is not up to date or pop-ups have been disabled, this button may not work properly. In that case copy all the text in the text box below and paste it into Notepad. Save the notepad .txt file. Then go back and change the extension of that file from .txt to .dbc. Then the .dbc can be imported to the data acquisition.

## CT3 Info

The embedded web page allows the user to easily update firmware without having to send the CT3 back to the factory. Current CT3 firmware is available for download from MSC's website. This allows updates or repairs to be done in the field. This page also shows past Error Codes from the CT3 & WFT.

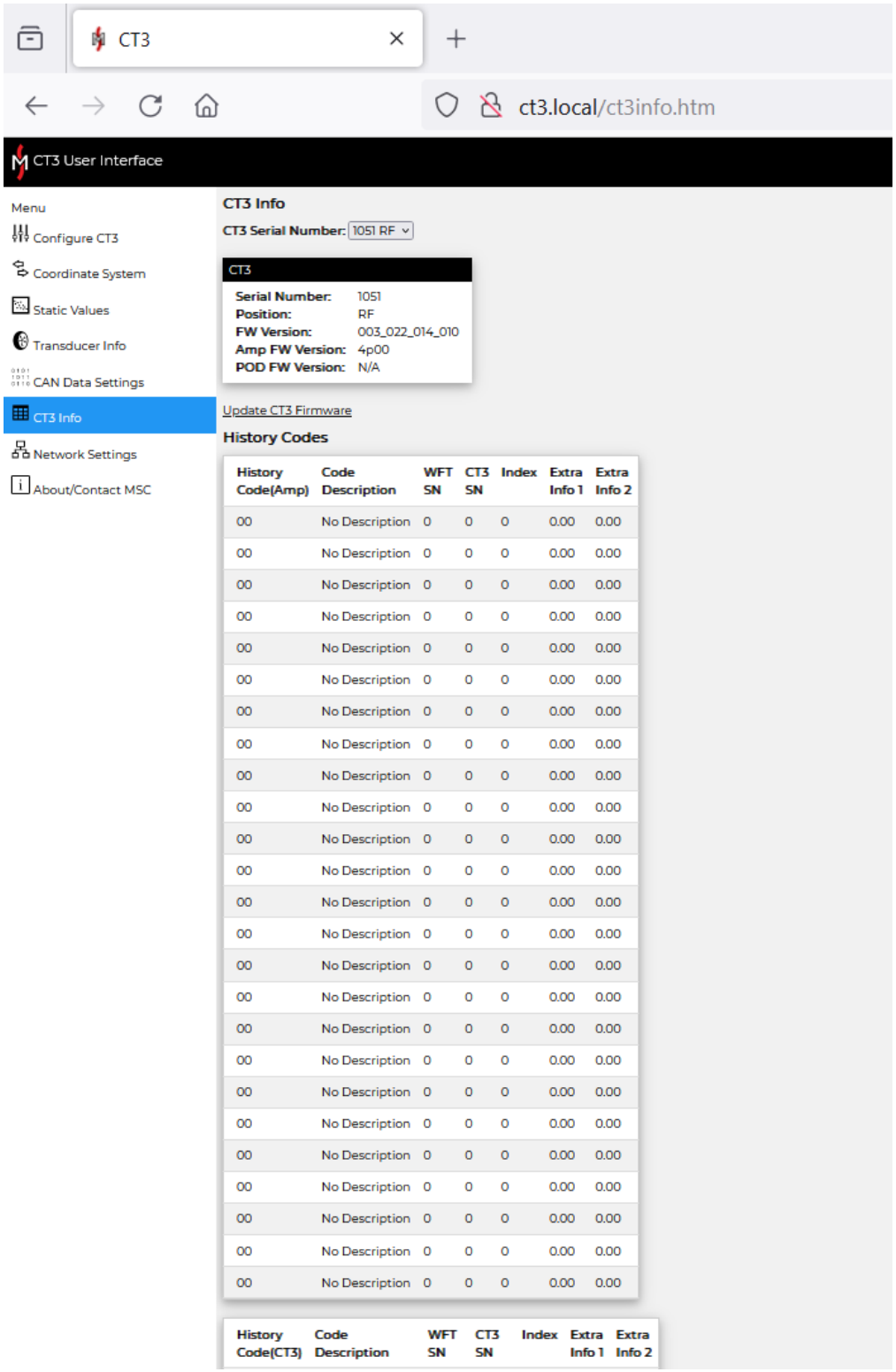


If an update is available, Michigan Scientific will provide an installation file. Save this file onto your laptop.

To update the CT3:

- Connect the USB cable to the CT3 to be updated and laptop.

- Click ‘Update CT3 Firmware’
- Press the Browse button and select the installation file.
- Press the Upload button
- The file will be uploaded.  Follow the prompts on the web page.
- Once complete you will be prompted to cycle power on the CT3.
- Once power has been cycled, the new firmware is ready to be used.

*Caution:* *Do not disconnect the CT3 or power down the computer or CT3 during the update.*

*Note:  Only the CT3 connected to the USB Cable will be updated.  Each CT3 electronics must be updated separately.*

*Note:  Update all CT3 electronics with the same version of firmware before using them in a stacked configuration.*

## Network Setting

Default IP addresses are set at 192.168.0.28 at the factory for all CT3s.  A new IP address can be set by going to the "Network Settings" tab located on the left side of the web page.  The IP address, Network Mask, and Network Gateway can be changed by entering a new number and pressing the Update button as shown below.

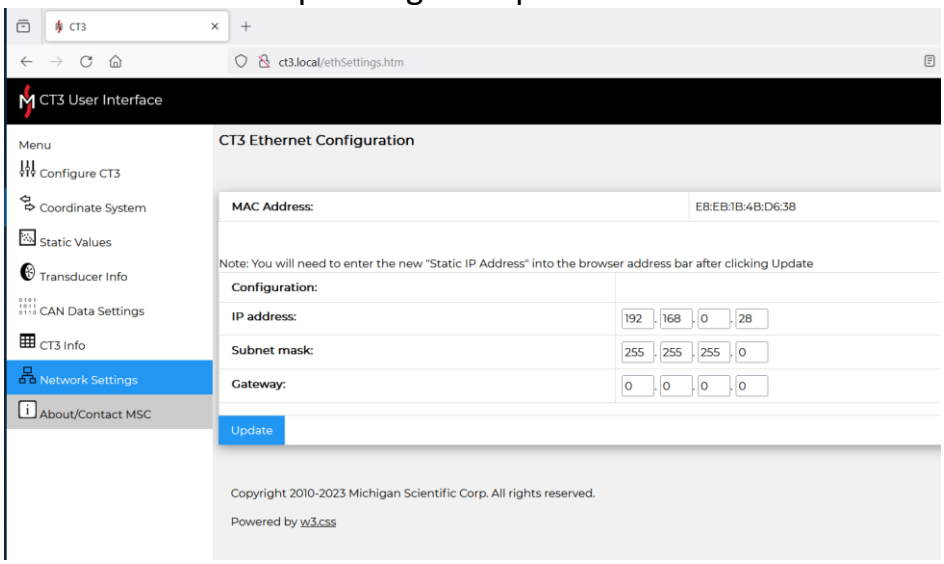


# Display Messages

The table below gives possible CT3 display message, their definition and possible remedy.

| CT3 Screen Message | Definition | Remedy |
|---|---|---|
| ROTATE WHEEL | WFT has not passed the index pulse after power cycle | Rotate WFT until encoder passes the index pulse |
| DUPLICATE POS | Two or more WFTs are set to the same vehicle corner | With CT3 in Set-up mode, press the Position/Advance button until the proper position is selected. |
| DIFF CAN RATES | WFTs are set to different CAN output rates | Go into the CT3 webpage with all CT3s stacked and set the CAN output rate |
| DIFF CAN MODES | WFTs are set to different CAN modes | Go into the CT3 webpage with all CT3s stacked and set the desired CAN mode |
| DIFF COORD SYS | WFTs are set to different Coordinate Systems | Go into the CT3 webpage with all CT3s stacked and set the Coordinate System |
| NO SMART SENSOR | The CT3 did not read the smart sensor on power up. | Make sure the cable is connected to the CT3 and amplifier on power up. Possible damaged cable. |
| NO DATA FROM AMP | No digital stream of data from the amplifier. | Make sure the cable is connected to the CT3 and amplifier on power up. Possible damaged cable. |
| SHUNT ERROR | The field Shunt values differ from the factory Shunt values by more than 2.5%. | Possible transducer or amplifier damage. |
| ZERO ERROR | The CT3 is trying to Zero out more than 40% of the full scale. | Check for mechanical short. Possible damage to the transducer or amplifier. |
| I2C3 ERROR | Internal communication error on I2C3 | Cycle power on CT3 |
| TELEM ERROR | Telemetry Error | |
| IND COM ERROR | Error communicating with Induction Module | Cycle power on CT3 |
| CDBUS ERROR | Internal communication error on CDBUS | Cycle power on CT3 |
| CHECK TEL SETUP | No RF received at TEL-STATOR from Telemetry Ring. | Make sure Induction Module SN is matched with WFT SN. Then with power off to all CT3 except one, in the CT3 webpage, pair the TEL STATOR with the WFT Telemetry Ring. |
| ERROR | Undefined Error | |

## Sampling Frequency

Much of the work done with WFTs for durability with a frequency of interest below 100 Hz. Common sample rates for WFT are 500/512 and 1000/1024 Hz depending on your test.

## WFT Coordinate System

The default coordinate system is referred to Right Hand Rule. With the Vehicle hoisted, pressing on the bottom of any tire will produce positive Fz force. Pressing on the front of any tire will produce a positive Fx force. Associated moments are per *the right hand rule*. See figure below.

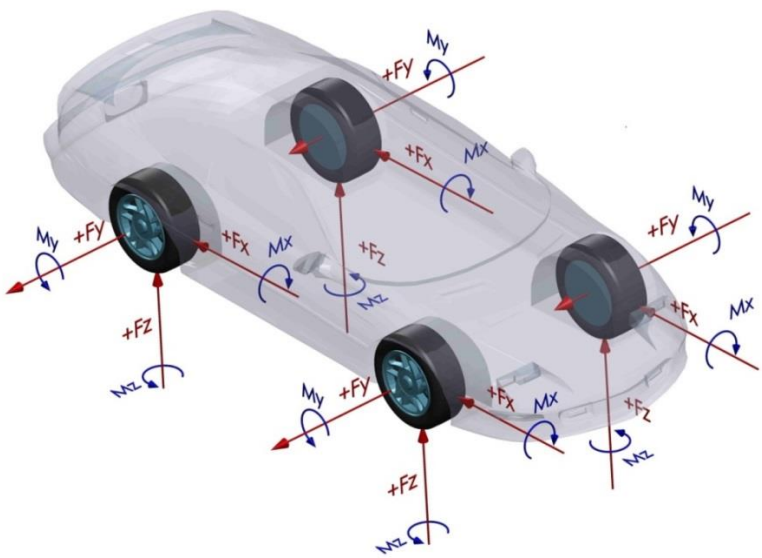


The WFT channels are defined as:
Fx = Longitudinal Force
Fy = Lateral Force
Fz = Vertical Force
Mx = Roll Moment (Wheel Camber)
My = Pitch Moment (Wheel Torque)
Mz = Yaw Moment (Wheel Steer)
Accel X = Longitudinal Acceleration
Accel Y = Lateral Acceleration
Accel Z = Vertical Acceleration

# Left Hand Rule Coordinate System (Optional)

The Optional Left Hand Rule Coordinate will switch the polarity of the Fy and My outputs only.

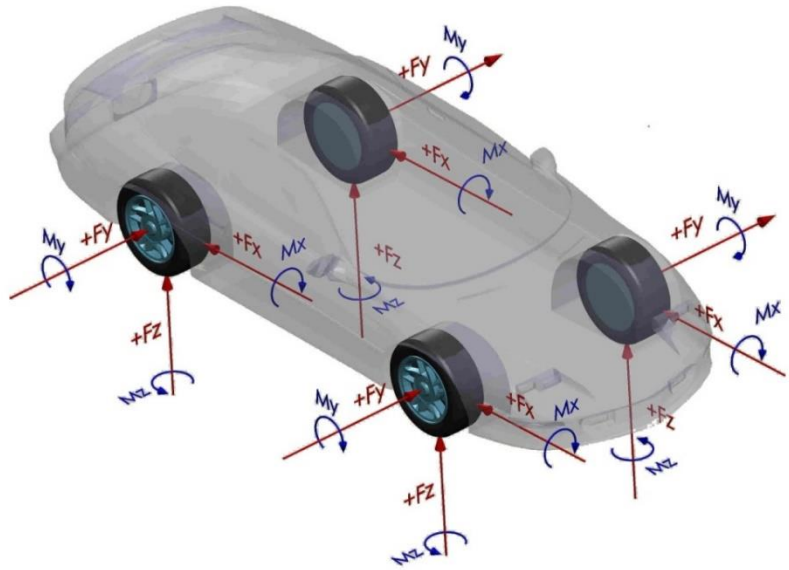


The Left Hand Rule Coordinate System gives the reaction force for a vehicle traveling in the SAE defined directions, per the drawing below.

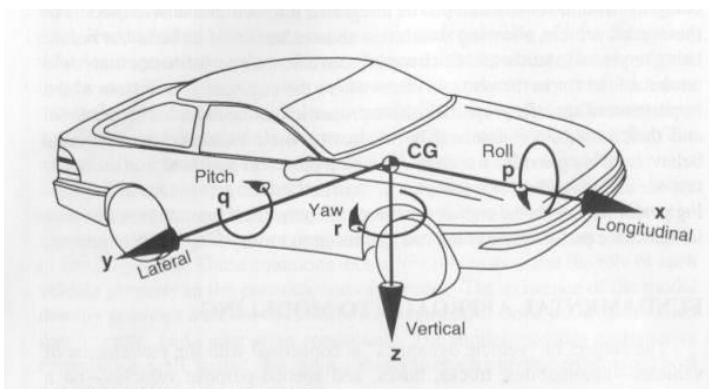


*Fig. 1.4 SAE Vehicle Axis System.*

# Weatherproofing

The WFT system is IP67 rated when all connectors are mated. When performing off-road testing, MSC recommends using fusion tape over the slip ring to cable connection to keep debris and dirt out of the ratcheting mechanism of the connectors.

## Recommended Static Load Rating and Overload

For each WFT model MSC gives recommended static load rating. This is a generalized rating that MSC uses to help customers select the proper WFT. This is calculated by taking the dynamic Fz load rating and dividing by 5. In almost all cases using these rating will prevent transducer overload. However there are extreme cases, for example Supercars & off-road jump maneuvers, that can create overload and damage a transducer, while staying under the recommended Static load rating.
If testing a vehicle capable of inputting extreme loads into the WFT, monitor the Mx channel closely. This should be Mx at the transducer center-line. MSC transducer are rated for 50,000 Mx cycles at full scale. If Mx loads go significant above full scale, the strain gage bridge can be damaged with very low cycles.

## Transducer Field Checks

Field checks can be done by comparing WFT Fz output to a scale. To compare to a scale, first record the WFT Fz output when the vehicle is hoisted. This is the weight of the tire, rim adapter, and half the WFT, it will be negative. Then set the vehicle on the ground and record the WFT Fz output. Add the absolute value of these two numbers together and then compare that value to the output of the scales.

If you suspect the WFT system has been damaged or has some issue, there are a couple of field checks that can be made.

1. Perform a Shunt Calibration. If no fault light comes on, this means the Shunt value is within 2.5% of the Factory Shunt calibration.

2. The transducer off-set is reported on the NIST calibration sheet. If the transducer bridge has some damage, it would likely change the transducer off-set. If the off-set has not changed by less the 0.05 volts, and the WFT passes the Shunt, it should be in good condition

To check the transducer off-set perform the following.

- Remove hub and wheel adapters.
- Set the transducer flat on the bench.
- Connect the amplifier to the transducer.
- Connect the cable to the slip ring and CT3.
- Power up the CT3.
- Press the *Mode* button to put the CT3 into *Setup* mode.

- Record the output for each channel.

## Factory Calibration

MSC recommends bi-annual calibrations for all it's Wheel Force Transducers. These can only be performed properly by MSC. MSC can calibrate all WFTs in Charlevoix, MI USA. Calibrations for car to light truck sized WFTs can also be performed in Shanghai, China. Calibration values and cross-axis sensitivity coefficients are programmed into the amplifier smart sensor for each transducer. The wheel force transducer was statically calibrated in an Automated calibration machine with calibration adapters replicating rim and hub adapters.

During manufacturing radial forces were applied around the perimeter of the outer ring at 45$^{o}$ intervals to check for radial uniformity.

## Optional Transducer Connector Covers are available for purchase

MSC recommends using connector covers when the amplifier is not installed and the WFTs are on the vehicle. This will prevent debris and moisture from getting in the transducer connector and protect the O-ring. The provided connector covers mount with 1/4-"-20 bolts.

# Troubleshooting

| Symptom | Possible Causes | Solution |
|---|---|---|
| CT3 Does not power up when the power switch is turned on. | Power cord not connected to power.<br><br>Power supply polarity is incorrect.<br><br>Internal overload circuit is tripped. | Check that power cord has power supplied to it and try to power up the CT3 again.<br><br>Check polarity. See appendix 1. If incorrect, reverse power supply leads and try to power up the CT3 again.<br><br>Cycle the power on the CT3. |
| Display reads 'NO SMART SENSOR' | Signal cable not connected properly.<br><br>Smart Sensor information not read by CT3 | Check signal cable connections. Cycle power, leave box off for 5 seconds before turning back on<br><br>Cycle power, leave box off for 5 seconds before turning back on. Check for grounding loops and ensure proper CT3 grounding. Swap components to troubleshoot. |
| Display reads 'NO DATA FROM AMP' | No digital data stream from amplifier | Check signal cable for damage. |
| Zero light does not go out. | Did not complete two full revolutions.<br>Encoder Issue | Continue rotating wheels.<br>Swap slip rings |
| Display reads 'ZERO ERROR' | Transducer offset greater than 40% of full scale. The electronics will still zero the channel that has greater than 40% full scale offset but it alerts the user. This condition can cause the system output to saturate before it reaches full scale. The Fault light will go out next time the power is cycled. | With wheel off of the ground, change CT3 to Setup mode and check output voltages. Confirm which channel has an offset greater than 40% full scale.<br><br>Unbolt the wheel & hub adapter. If offset goes away check adapters for damage.<br><br>If offset does not go away send transducer to Michigan Scientific for checkout and repair. |

| Symptom | Possible Causes | Solution |
|---|---|---|
| Display reads 'SHUNT ERROR' | Force input to the transducer during shunt sequence causes out of tolerance shunt.<br><br>CT3 failed to record data in memory chip.<br><br>Transducer or amplifier is out of tolerance by 2.5% or more. | Jack up vehicle, cycle power, and repeat the shunt sequence.<br><br>Check the cable connections, cycle power, and repeat the shunt sequence.<br><br>Swap amplifiers and move smart sensor (See appendix 4) and repeat Shunt sequence. If Shunt now passes, the problem is with the amplifier. If Fault light still comes on with new Shunt sequence, the problem is with the transducer and it must be returned to Michigan Scientific. |
| Data has once-per-revolution wave form. | The zero is not correct.<br><br>The tire can have stiffness variations, which will appear as once-per-revolution variations. This is a real force.<br><br>Wheel adapter can be bent or out of tolerance. The force is real. | Perform zero procedure.<br><br>If force variation is not acceptable, replace the tire.<br><br>If force variations are not acceptable, replace the wheel adapter. |
| Data has twice-per-revolution waveform. | The sensitivities are out of tolerance due to incorrect or corrupted sensitivity values.<br><br>One of the strain gage bridges has failed. | Perform the shunt sequence. It is important that no dynamic forces are imposed on the transducer at this time. These forces can come from movement in the vehicle. For best accuracy, lift the wheel off the ground.<br><br>Check the outputs during the shunt sequence and check the zero data when the CT3 is in setup mode. If the shunt value is not correct or the zero has shifted, send transducer in for checkout and repair. |
| Fx, Fz, Mx, and Mz channels look like a sin waves when wheel is turning | CT3 is set to wheel coordinates.<br><br>CT3 is in setup mode. | Check status of lights on front panel. If the Wheel Coordinates light is illuminated, press the Coordinates button on top to change back to vehicle coordinates. Check outputs.<br><br>If the Setup Mode Light is illuminated, press the Mode button on top to change back to run mode. |

| Symptom | Possible Causes | Solution |
|---|---|---|
| Channels, which should have no load, have an offset even after the zero procedure is performed. | CT3 is in Set-up mode | Switch CT3 to RUN mode |
| | Data channels have error due to rolling zero procedure | If the rolling zero procedure was performed on the road, there will be real forces that will be zeroed out. For best accuracy, perform the zero on the hoist. Further discussion is in the zeroing section of this manual |
| | Slip Ring is not oriented properly. | See "Angle reference incorrect" below |
| | Incorrect zero, direction of wheel rotation was changed during the zero procedure. | Be sure that the wheel is turned only in one direction during the zero procedure. |
| | External forces were imposed during the zero procedure on the hoist. | When turning the wheels, be sure to apply force only on the amplifier package. This insures that no forces are imposed through the transducer. |
| | Incorrect zero, on-the-road zero was performed on a rough surface. | Redo the zero procedure. For best accuracy, perform the zero on the hoist. |
| | Data acquisition system has some offset. | Using a volt meter, check the outputs from the CT3. If the outputs are indeed zero, null the offsets in the data acquisition system. |
| | CT3 electronics are damaged. | Swap the CT3 with another unit, if available, and try to zero it. If the problem goes away, send the CT3 electronics in for checkout and repair |
| | Offsets are too large for the CT3 to zero them. Damage to transducer. | The wheel may have been damaged. Remove from the wheel and hub adapters and place on the bench. Change the CT3 to setup mode. Check the offset. If it is out of range, send in for checkout and repair. |

| Symptom | Possible Causes | Solution |
|---|---|---|
| Outputs from CT3 stay zero for all channels even when force is present. | CT3 is not turned on.<br><br>Encoder has not found an index pulse.<br><br>The bridge power kill feature is invoked.<br><br>Signal cable from transducer has been disconnected.<br><br>Signal Cable from transducer has been damaged.<br><br>Output cable from the CT3 is disconnected or damaged.<br><br>The data acquisition cabling is not connected improperly. | Check to see if the CT3 is turned on.<br><br>The output channels stay at zero until the encoder sees an index pulse. Turn tire at least one complete revolution. Check outputs.<br><br>Check to see if the bridge power light is on. If it is not, press the Bridge Power button. The light should illuminate.<br><br>Turn off the CT3 electronics, reconnect the cable and turn the CT3 electronics back on.<br><br>Inspect cable for damage. A cable diagram is located in the appendix.<br><br>Check connection and inspect cable for damage<br><br>Check the output from the CT3 with a volt meter. If the output is correct, check the cabling or data acquisition setup. |
| The channel offsets change during use. | If off-set is only present in Fy channel, transducer may not have been exercised.<br><br>A severe event caused some shifting in the bolted joints between the transducer and adapters.<br><br>A severe event overloaded the transducer. | Exercise transducer by driving car. Perform figure 8 maneuver in both directions and perform two hard brake stops, then re-zero.<br><br>While it is not common, a severe event could cause some offset in channels. Perform the zero sequence.<br><br>Check the transducer offsets. Remove the wheel and hub adapters. Change the CT3 to Setup Mode Check the offsets for each channel with a voltmeter. If the offsets have changed, send the transducer in for checkout and possible repair. |

| Symptom | Possible Causes | Solution |
|---|---|---|
| Higher or lower than expected output from one or more channels | The data acquisition system sensitivities are incorrect.<br><br>Incorrect amplifier package<br><br>Transducer is damaged.<br><br>Amplifier package is damaged. | Check data acquisition system. The correct sensitivities are listed on the calibration sheet in the back of this manual.<br><br>Check that the correct amplifier package is being used with the transducer.<br><br>Check the transducer offsets and shunt values. Send in for checkout and repair if needed.<br><br>Send in for checkout and repair if needed |
| One or more output channels output incorrect polarity. | Right/Left Switch is not in the correct position.<br><br>Cable to data acquisition is improperly connected.<br><br>Sensitivity is incorrect in the data acquisition system.<br><br>Slip Ring is not oriented properly<br><br>Coordinate System is not as expected | Check to see if switch is correct. Change if needed.<br><br>Check the voltage from the CT3. If correct, check pin-out for signal cable to the data acquisition system.<br><br>Check the voltage from the CT3. If correct, check the sensitivities in the data acquisition system.<br><br>See "Angle reference incorrect" below<br><br>Check the selected Coordinate System in the CT3 webpage |
| Angle reference incorrect | Slip Ring is not oriented properly<br><br>Encoder Stator Offset Angle entered incorrectly | Orient the slip ring so that the connector is pointed vertical. The side surfaces of the slip ring should be vertical.<br><br>Using the CT3webpage, first confirm that the slip ring/encoder reference angle stored in the webpage is incorrect and then update with the appropriate angle. |
| Data appears noisy | CT3 chassis ground not connected to vehicle chassis | Connect one end of a banana plug cable to the CT3 and connect the other end to the vehicle chassis or to data acquisition grounding stud, if the data acquisition is grounded to Chassis, not both.<br>Or<br>Connect the shield of the CT3 power cable to the vehicle chassis. |

# Appendix 1- Wiring and Shielding

## CT3 *Power* Connector Pin-Out

| Mating Connector for Power: | | |
|---|---|---|
| 1 | Ground | Black Wire |
| 2 | Power High | White Wire |
| Case | Shield/Ground | |

## *Proper CT3 Power and Signal Grounding Diagram*

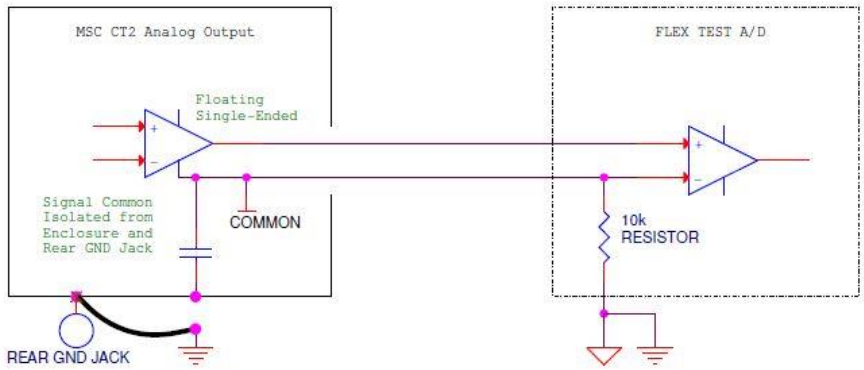


## CT3 Analog Output Module Cable Pinout

| **CT3 Analog Output Module** - Output Cable Pinout | | | 2/15/2023 |
|---|---|---|---|
| **Pin#** | **Function** | **Description** | **Color** |
| 1 | GND | NC | NC |
| 2 | Output 2 | Signal 2 High | White |
| 3 | GND | Signal 2 Low | Brown |
| 4 | Output 4 | Signal 4 High | Yellow |
| 5 | GND | Signal 4 Low | Green |
| 6 | Output 1 | Signal 1 High | Red |
| 7 | GND | Signal 1 Low | Blue |
| 8 | Output 3 | Signal 3 High | Pink |
| 9 | GND | Signal 3 Low | Gray |
| NC = Not Connected | | | |

# Appendix 2 - Example Quick Reference Calibration Sheet

**Michigan Scientific Corporation**

Calibration: ISOMSC-1163113373-1027

321 E. Huron St.
Milford, MI 48381
Voice: (248) 685-3939
Fax: (248) 684-5406

8500 Ance Road
Charlevoix, MI 49720
Voice: (231) 547-5511
Fax: (231) 547-7070
www.michsci.com

**Quick Reference Sheet**

| Transducer Serial Number: | Calibration Date: |
|---|---|
| LW-2T-40K 1163 | 11/10/2023 |

**Wheel Force Transducer Electronics: CT2**

Gain and offset adjustments are handled in the CT2. The CT2 uses a shunt calibration sequence to adjust the gain so that the following sensitivities are correct. It is good practice to invoke the Shunt sequence by pressing the Shunt button at the start of each new test set-up. The Shunt sequence also compares the factory Shunt output to the field Shunt output. If these values differ by more than 2.5%, the fault and shunt lights will stay lit. This indicates a likely issue with the transducer or amplifier.

**Sensitivity**

| | | | | | |
|---|---|---|---|---|---|
| Fx | 1 Volt = | 4,047 | lbs | 18,000 | N |
| Fy | 1 Volt = | 2,023 | lbs | 9,000 | N |
| Fz | 1 Volt = | 4,047 | lbs | 18,000 | N |
| Mx | 1 Volt = | 3,319 | lb.ft | 4,500 | N.m |
| My | 1 Volt = | 3,319 | lb.ft | 4,500 | N.m |
| Mz | 1 Volt = | 3,319 | lb.ft | 4,500 | N.m |
| Accel X | 1 Volt = | 10 | g | 98 | $m/s^2$ |
| Accel Z | 1 Volt = | 10 | g | 98 | $m/s^2$ |

The Sensitivities listed above are the default settings which coorespond with a ±10 Volt Analog Output range. In the CT2 webpage it is possible to change the Analog output range. If the Analog output range is changed the above listed sensitivities will also change correspondingly.

**Shunt Calibration**

| | | | | | |
|---|---|---|---|---|---|
| Fx | 5.114 V* = | 20,695 | lbs | 92,058 | N |
| Fy | 5.247 V* = | 10,617 | lbs | 47,226 | N |
| Fz | 5.098 V* = | 20,630 | lbs | 91,769 | N |
| Mx | 5.581 V* = | 18,524 | lb.ft | 25,115 | N.m |
| My | 4.466 V* = | 14,822 | lb.ft | 20,095 | N.m |
| Mz | 5.598 V* = | 18,579 | lb.ft | 25,190 | N.m |

When recording analog signal outputs, it is good practice to check the delta shunt output for each channel through the data acquisition and compare it to the engineering unit values listed above. If done, this will ensure that each channel is properly connected and scaled in the data acquisition. To calculate the delta shunt output add the absolute value of the positive Shunt output to the absolute value of the negative Shunt output and divide by two. The delta Shunt output you calculated should match the above value within 0.5%.
*Shunt voltage listed is nominal, the actual voltage may vary.

**Speed and Position**

| | | | |
|---|---|---|---|
| Speed Sensitivity | 1 Volt = | 200 | RPM |
| Position Sensitivity | 1 Volt = | 36 | Degrees |

The Speed Sensitivity listed above is the default setting (this corresponds to 2000 RPM full scale). The Speed Sensitivity can be changed to 100 or 300 RPM per volt in the CT2 webpage (corresponding to 1000 or 3000 RPM full scale). Check the CT2 webpage for current settings. Speed is updated at each encoder pulse.

## Appendix 3 – Changing Amplifier Smart Sensor

Michigan Scientific ‘D3’ & ‘D3X’ Wheel Force Transducer Amplifiers have a removable smart sensor. The smart sensor contains all the calibration information for the WFT. If an amplifier is damaged, the smart sensor can be removed from the amplifier housing and installed in spare amplifier housing. Then the WFT system can continued to be accurately used.

Use a 3/32” Allen wrench to remove the 2 bolts holding the smart sensor to the amplifier. Remove the smart sensor.

Install the desired smart sensor into the spare amplifier housing, ensuring o-ring stays in place as shown. Install the two #4-40 x 3/16” bolts. The serial number on the smart sensor must match the transducer serial number it is being used with.

Notes: